Chapter 1

INTRODUCTION TO ORDNANCE AND GUNNERY

A. General

1A1. Definition of terms

This text is concerned with the study of Naval Ordnance and Gunnery. Together, the terms "ordnance" and "gunnery" embrace weapons and their use.

Ordnance comprises the physical equipment pertaining to weapons. This equipment is further classified as explosive ordnance, including such elements as gun ammunition, torpedoes, mines, bombs, rockets, and the like, and inert ordnance, which includes projecting devices (such as guns, launchers, and release gear), protective armor, and all the equipment needed to operate and control weapons. Aboard ship it refers to all elements that come under the general term "ship's armament."

Traditionally, gunnery is the art and science of using guns. However, in the sense used in this book, the term is broadened in agreement with modern usage, to include the operation and control of all elements of armament. Gunnery is concerned with the practical use of ordnance.

1A2. Navy Department responsibilities for ordnance and gunnery

Within the Navy Department, the responsibility for ordnance material rests chiefly in the Bureau of Ordnance. As defined by *Navy Regulations,* 1948:

> "The Bureau of Ordnance shall be responsible for the following, except as otherwise prescribed in these regulations or by the Secretary of the Navy:
>
> "The design, development, procurement, manufacture, distribution, maintenance, repair, alteration, and material effectiveness of naval ordnance; the research therein; and all pertinent functions relating thereto, including the control of storage and terminal facilities for, and the storage and issue of, ammunition and ammunition details."

The Bureau of Ordnance maintains field activities which contribute to the performance of its mission. These field activities include research activities, such as the Naval Ordnance Laboratory and the Naval Proving Ground, inspection facilities, manufacturing plants, such as the Naval Powder Factory and the Naval Gun Factory, and various storage and distribution facilities.

The operational use of weapons is controlled by the Chief of Naval Operations through the fleet and force commanders, with appropriate liaison with the technical bureaus concerned. This control includes cognizance over operational and team training.

The Bureau of Ships and the Bureau of Aeronautics are concerned with the problems of design caused by the installation of ordnance on ships and aircraft, respectively, and their plans are coordinated with those of the Bureau of Ordnance in the satisfactory solution of these problems.

The Bureau of Naval Personnel is charged with the responsibilities for training both officers and enlisted personnel as individuals in the performance of their professional duties, except as otherwise assigned, and for the procurement, distribution, and record keeping of all personnel of the Navy. Training programs for all gunnery personnel, except aviation, are maintained by this Bureau.

1A3. Department of Defense responsibilities

In ordnance and gunnery, as in all other matters, the Navy functions not alone but as one member of a team. The Army and the Air Force both maintain ordnance establishments and both are interested in the art of gunnery. Ordnance equipment is usually developed by and procured by the service primarily interested. Doubtful or borderline cases are assigned to one service or another; for development work, by the Research and Development Board; for manufacture and procurement, by the Munitions Board.

There are hundreds of cases in which an item of ordnance equipment is used by all three services. For instance, the Navy and the Air Force both use Army rifles and pistols; the Air Force carries Navy mines, and

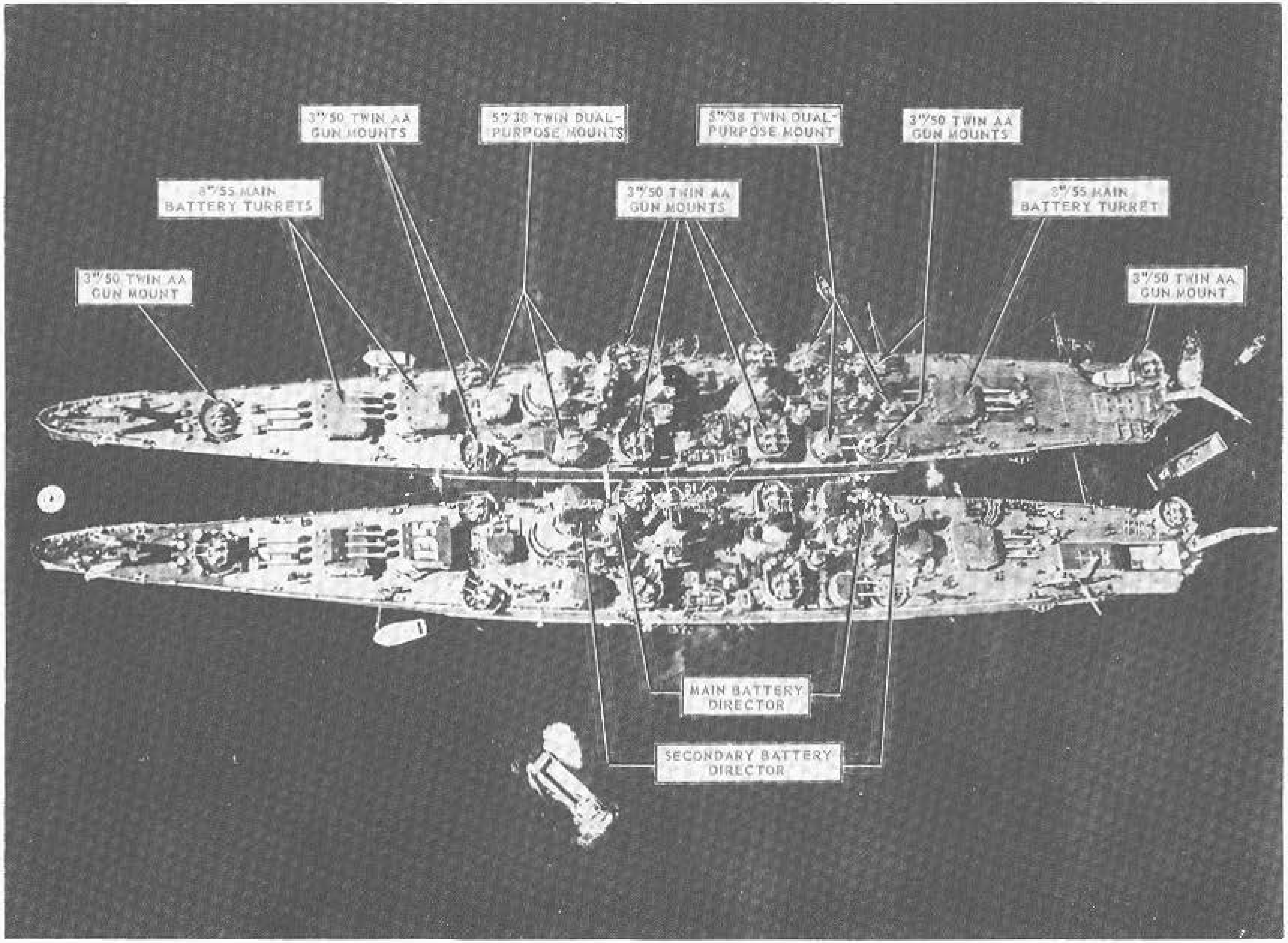

FIGURE 1B1.—Armament arrangement on a cruiser.

the Navy, Air Force bombs; the Army uses some Navy projectile fuzes, and the Navy, several Army rocket fuzes. When one service develops and procures a device for another, it usually furnishes all appropriate spare parts, tools, and instructional material as well.

Neither the Marine Corps nor the Coast Guard maintains ordnance departments. Each of these services has upon occasion developed and procured highly specialized equipment for itself; ordinarily, however, they are dependent for their ordnance upon the Army, Navy, and Air Force.

1A4. Function of the gunnery department aboard ship

The requirements for battle are the basis for the organization of the combatant ship. Under *Navy Regulations,* 1948, in ships whose offensive characteristics are primarily related to ordnance or aircraft, one of the major command departments is the gunnery department, headed by the gunnery officer. He is concerned primarily with the maintenance, upkeep, and operation of all the equipment in the ship's armament (with the exception of that of the ship's aircraft in ships having an air department). His department is organized into divisions, the number and function of which depend upon the class and purpose of the ship.

In auxiliary vessels, and certain other types whose offensive characteristics are not primarily related to ordnance and aircraft, gunnery is a secondary function of the deck department, which is headed by the first lieutenant. In this case such ordnance equipment as is carried is the responsibility of the first lieutenant, usually exercised through a gunnery officer who is one of his assistants.

B. Scope of the Text

1B1. General

This text is planned to satisfy several needs. It is intended as a training text for midshipmen and officer candidates. It will be useful to gunnery department officer personnel as a reference and as a guide in the gunnery aspects of shipboard organization. And it is intended to serve as a convenient reference for all officers, other than those in the gunnery department, who have occasion to deal with any aspect of United States naval weapons—fiscal, supply, passive, defensive, etc.

This text is not intended to supersede or supplant official publications of the Chief of Naval Operations, the Bureau of Ordnance, or the Bureau of Naval Personnel with regard to doctrine, weapons and ammunition, shipboard organization, or shipboard operations. The reader is referred to official publications of these authorities for instructions on these matters. This text will, however, serve as an introductory guide to the official publications on these matters.

1B2. Presentation of the subject

It is difficult to present a clear understanding of the structure of ordnance mechanisms without some consideration of their operational use. Similarly, the successful study of gunnery depends upon a thorough understanding of the weapons and instruments used. In this book a compromise is effected: Volume 1 concentrates upon the study of weapons, with minimum reference to control, while volume 2 assumes knowledge of the first part and is concerned with fire control.

Emphasis has been placed upon functional operation of basic systems rather than upon the details of a wide variety of individual instruments. This book was not written for the maintenance man or the repair technician. Ordnance Pamphlets are available for all equipment discussed in this text and should be consulted when more detailed information is required.

1B3. Naval weapons

The weapons to be discussed in the first part of the book include:

Guns. A gun typically consists of a tube, closed at one end, from which a projectile is fired by the burning in an enclosed space of a propellent charge. Guns are general-purpose weapons used against ships on the surface, aircraft, shore installations, and personnel.

Rockets. The rocket is a self-propelled weapon whose absence of recoil makes it particularly suitable for firing from small craft or aircraft.

Guided missiles. These are new weapons under current development. They may travel great distances with heavy loads, and self-propelled, and contain a mechanism capable of directing their own flight.

Torpedoes. A torpedo is a self-propelled underwater missile used against ships.

Mines. Mines are typically static weapons used to hinder enemy operations.

Depth charges. These are antisubmarine weapons which are exploded at a set depth or by proximity to a submarine.

Bombs. The term bombs covers all missiles dropped from aircraft except torpedoes, mines, and guided missiles.

Chemicals. This term is used to describe a variety of solids and gases which can be fired in projectiles

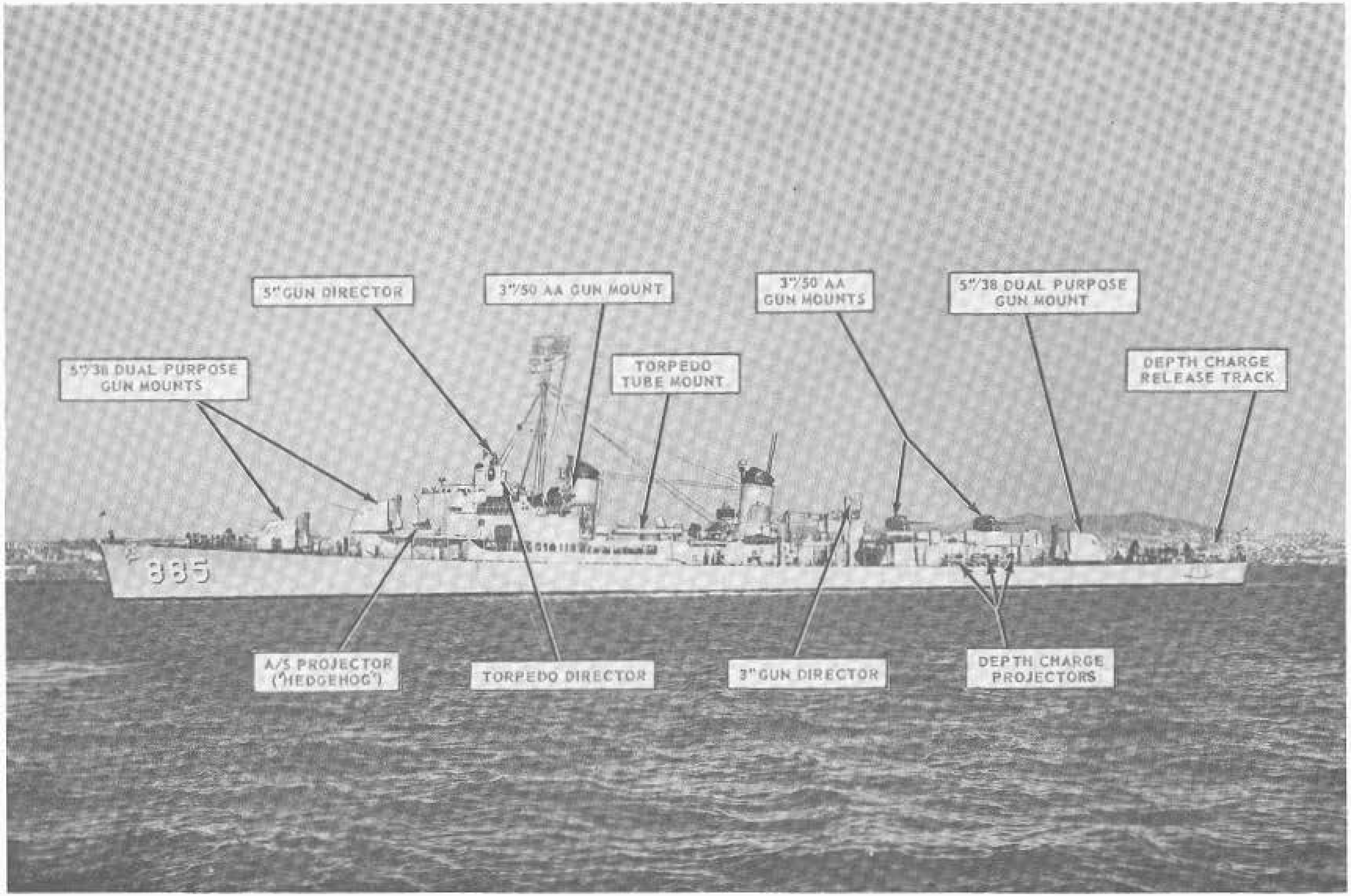

Figure 1B2.—Arrangement of weapons on a destroyer.

from guns or mortars or dropped from aircraft. In World War II they were used chiefly for screening and as incendiaries.

1B4. Ballistics

Ballistics is the science of projectile motion. It falls naturally into two aspects; *interior* ballistics, which treats of the motion of the projectile within the bore of the gun, and *exterior* ballistics, which considers the action of the projectile in flight.

Each of these fields is the subject of careful and detailed study by specialists. Their findings are of enormous importance in gun design and in the development of fire-control instruments. A general understanding of ballistics is essential to the naval officer afloat, so that he may achieve the best results with his ordnance equipment.

1B5. Fire control

The practical application of exterior ballistics, and the methods and devices used to control guns and other weapons are known as fire-control. The second part of the book treats of this subject in some detail, but a brief listing of some types of fire control equipment at this point may help the student form a better picture of the ordnance equipment found aboard most ships.

Rangefinders. Rangefinders are optical instruments used to measure the distance to the target.

Radar. Radar, using electronic means, provides more accurate ranges and, in addition, may measure bearing and elevation of the target.

Directors. Directors are mechanical and electrical instruments which control guns from a remote station. They are usually located at a higher level than the guns to provide greater range and better visibility.

Rangekeepers and computers. Rangekeepers and computers are mechanical and electrical, or electronic, instruments which automatically and continuously compute information needed to direct gunfire.

Stable elements. Stable elements are gyroscopically controlled mechanisms which measure movement of the ship with respect to the horizontal and compensate for the effect of this motion.

Transmission systems. Transmission systems are used to send information from one station to another; for example, to transmit gun orders automatically from the computer to the gun mount.

1B6. Identification of ordnance equipment

Each assembled unit of ordnance equipment is identified by a name, a mark number, a modification number, and a serial number. This information is stamped either on the equipment itself or an attached plate. Whenever a basic change in design is made, a new mark number is assigned. Modification numbers are added when a minor alteration of design has been made. Individual units of identical design have the same name, mark, and modification numbers, but have different serial numbers.

An example will help to illustrate the use of this identification system: Computer Mark 1 Mod 0 is the first computer designed. The Computer Mark 1 Mod 1 is similar to the Computer Mark 1 Mod 0, but differs in some details. Serial numbers are usually assigned on the basis of finished assemblies. The name of a gun includes its caliber, as 5-inch 38 caliber Gun Mark 12 Mod 1.

When the Navy uses items of Army ordnance, the Army nomenclature is retained. In Army nomenclature, **M** corresponds to Mark, **A** to Modification; for example, the Carbine M1A1.

In referring to a piece of ordnance, the information required for identification depends upon the circumstances. If reference is made to functions only, the name, mark, and modification will be sufficient. If, however, spare parts are being requested from the Bureau of Ordnance, the serial number may also be necessary.

1B7. Knowledge of material

The operation of much ordnance equipment calls for detailed knowledge. Some details are included in this text, but the officer working with the gear should not be content with the coverage given here.

Shipboard installations can seldom be disassembled for the purpose of instruction, but a young officer should miss no opportunity to observe the disassembly of equipment for repair. At other times, he must study pamphlets, blueprints, ordnance circular letters, and other sources. He should not be satisfied until he is entirely familiar with the equipment assigned to his charge.

This information is essential to the gunnery division officer, not only because of his responsibility for the equipment itself, but also because he is responsible for the training of the enlisted men assigned to him for the operation and maintenance of the equipment. Without this knowledge, he will lack the necessary confidence, and his men will be quick to notice his deficiencies. Of course, much confidence can and must be placed in the senior petty officers, but this does not relieve the division officer of his responsibility.

1B8. Care of material

The Bureau of Ordnance issues complete instruction for proper maintenance of ordnance material. These instructions should always be consulted and followed in detail.

All ordnance material is carefully manufactured, usually to close tolerances. Any careless treatment is likely to damage seriously a valuable piece of equipment, disabling it when it may be needed most. In using any fine apparatus, it is wise to be governed by common sense. The equipment was built to function. If it does not, something is wrong, and physical forcing will cause trouble. Levers, knobs, buttons, and switches should not be touched by a person who does not know what they will do. The *Bureau of Ordnance Manual* states:

"The permanent damage done in a single day of experimentation by inexperienced personnel has frequently exceeded that which, with proper care, might be expected during the entire normal life of the material."

1B9. Safety precautions

Over a period of many years, various rules have been established to prevent casualty to personnel through carelessness or improper use of equipment. These rules are called Safety Precautions and are published by the Bureau of Ordnance, having the full force of regulations. They have been formulated through actual experience with ordnance, and are revised as needed.

Selected safety precautions are included in appendix A of this book.

Chapter 2

EXPLOSIVES

A. Introduction

2A1. Fundamental ideas

The value of ordnance lies in its power to destroy. This depends on the use of explosives more than on any other factor. The gun projectile reaches the target because of the energy released by the propellent charge; it disrupts defenses and harasses enemy personnel primarily to the extent that the bursting charge it carries is effective. Mines and torpedoes tear holes in the steel skin of a ship because of the force released by the great quantity of high explosives they contain.

One of the most important aspects of the history of ordnance is the development of explosives from the weak and unstable gunpowder of Roger Bacon to the highly specialized explosives of today. The latest discovery was nuclear fusion and its release of tremendous explosive energy.

The present chapter is confined to a discussion of the characteristics, use, and handling of chemical explosives currently used in the United States Navy.

B. Explosive Reactions

2B1. Preliminary

Most people know that chemistry and physics are sciences which deal with *matter* and *energy*, and that matter and energy are closely related. Chemistry deals with the composition and changes in composition of substances, and a chemical change is a definite permanent change of certain properties, with the formation of new substances. Such changes are always accompanied by a gain or loss of energy. Whenever a chemical change takes place, there is a chemical reaction.

An explosion is one kind of a chemical change. It is a rapid and violent release of energy, produced by the rapid chemical decomposition and oxidation of any of several substances called *explosives*. It is true, of course, that the term explosion is often applied to violent releases of energy not involving explosive substances. In the explosion of a boiler, for example, the water (or steam) is not considered an explosive substance. But in this text, the term explosion is reserved to describe a chemical reaction that produces heat, and forms decomposition products, some or all of which are gases. An explosion is simply a rearrangement process, whether it is a rapid burning (as in some explosives) or a violent detonation (as in others).

Many modern explosives are based on chemical compounds containing nitrogen. Though nitrogen itself is chemically a relatively inert gas (it makes up most of the atmosphere), its oxidized form combines with other elements to form (among other products) more or less unstable chemical compounds which explode violently in the sense of the word as used in this

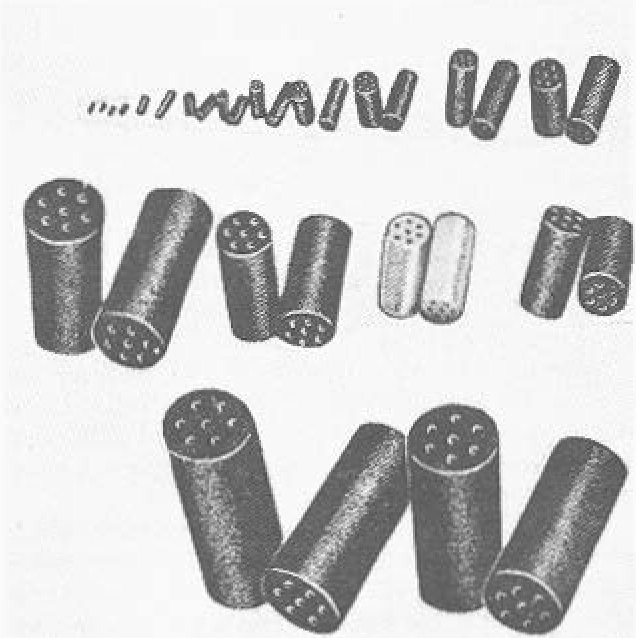

FIGURE 2B1.—Smokeless powder grains (caliber .30 to 16''/50); the two white grains are SPCG powder.

text. This violent explosion (or decomposition and rearrangement) liberates large amounts of heat and produces large volumes of gases, which expand and occupy a great deal more space than the explosive did originally. An explosive reaction, therefore, always produces a sudden rise in pressure because of the formation of gases and their expansion by the heat liberated in the reaction. The sound and shock waves associated with an explosion are caused by this sudden rise in pressure.

It will be seen later that the rise in pressure may be comparatively slow or it may be so fast as to be almost instantaneous. But whether an explosion is fast or slow, it is a decomposition and rearrangement of substances and is therefore basically a chemical reaction.

For a discussion of atomic explosives, see volume 2 of this course.

2B2. Classification of explosive substances by reaction

Explosive substances include a large number of chemical compounds and mixtures. The greater number of military explosives fall into the following groups.

1. *Explosive inorganic compounds.* Lead azide is an example. Lead azide is used as the detonator in major-caliber fuzes, because its relatively low sensitivity permits the projectile to penetrate armor plate before the detonator functions.

2. *Explosive organic compounds.* In this group are the main military explosives. It includes nitrated derivatives of the carbohydrates (example: nitrostarch), and the nitrated derivatives of aromatic compounds, such as trinitrotoluene (TNT). The prefix *nitro* appears in the chemical names of several modern explosives, such as *nitro*glycerin, *nitro*cotton (the main component of smokeless powder), tri*nitro*phenol (picric acid), and others.

3. *Mixtures.* This group includes mixtures formed by oxidizable and oxidizing bodies, solid or liquid, neither of these being explosives separately. Black powder is an example.

With regard to their type of *reaction*, however, explosives are classified as *low* (sometimes called burning or *progressive*) and *high*. This speed of burning or breaking up is considered the most important characteristic of an explosive substance.

A *low* explosive reaction is a true burning, which proceeds from point to point throughout the explosive substance, accelerated by the heat and pressure produced. Since a low explosive burns, it builds up pressure comparatively slowly, delivering a powerful but controlled push to the projectile, following through all during the projectile's movement in the bore. Low explosives always contain a source of oxygen, and one or more combustive elements such as carbon or hydrogen. Because the explosive itself contains all the oxygen required for the reaction, the combustion can proceed without support from outside sources. Among the well-known burning explosives are black powder, ballistite, United States Navy smokeless powder, and Cordite.

NOTE: The term "low explosive" is no longer recognized by specialists as a distinctive term denoting a class of explosives, since many explosives of this type can be made to react like high explosives under certain conditions. However, the term continues to be used in this text because the classification, though perhaps no longer accurate enough for the specialist, is still a useful concept for the student.

High explosives give rise to reactions that proceed almost instantaneously throughout the explosive mass. They produce their pressure (with a shattering effect) almost instantaneously, in what is called a detonation. If a high explosive were to be used for a propellant in a cartridge case, all its energy would be used in shattering the gun before the projectile had a chance to move. Combustible elements and oxygen are usually, but not always, present in high explosives. These substances are characterized by unstable molecules that include weakly attached parts such as nitrate and nitro groups. The initiating impulse brings about a breaking down of the chemical bonds, and a molecular rearrangement occurs so rapidly that the evolution of hot gases is almost simultaneous throughout the mass. Some examples of high explosives are: TNT, RDX, HBX, tetryl, and ammonium picrate.

Primary explosives, like high explosives, detonate when initiated, but they are extremely sensitive and, as a class, have less power, weight for weight, than high explosives. However, there is no abrupt, sharp dividing line between primary and high explosives. Primary explosives are used chiefly to initiate explosive trains. Primary explosives in current use in the Navy include lead azide, mercury fulminate, lead styphnate, diazodinitrophenol (DDNP), tetracene, and nitromannite.

2B3. Classification of explosive substances by composition

From the standpoint of their composition, explosives may be divided into *explosive mixtures* and *explosive compounds.*

Explosive mixtures are an intimate mixture of distinct substances, carefully prepared and mechanically conglomerated in varying proportions. Explosive mixtures must have some oxygen supplier such as nitrate or chlorate, and some combustible such as carbon or sulphur. Black powder is a typical example of an explosive mixture.

Explosive compounds are homogeneous substances whose molecules contain within themselves the oxygen, carbon, and hydrogen necessary for combustion. Whereas the characteristics of explosive mixtures can be varied by changing the proportions of the components, the elements constituting an explosive compound are always present in the molecules in the same proportions. Therefore, the nature of the explosive compound cannot be changed by varying the quantities of the constituent elements. Explosive compounds of different characteristics can be obtained, however, by nitrating the basic substance to different degrees. Explosive compounds consist very largely of organic compounds (hydrocarbons) into which nitric ($-NO_2$ or $-O-NO_2$) groups are introduced by the process of nitration. Examples of explosive compounds produced by nitration are cellulose nitrate, nitroglycerine, TNT, ammonium picrate, tetryl, and RDX.

2B4. Characteristics of explosive reactions

The most important characteristics of explosive reactions are as follows:

1. *Velocity.* An explosive reaction differs from ordinary combustion in the velocity of the reaction. This is also the basis for differentiation between high and low explosives. The velocity of combustion of explosives may vary within rather wide limits, depending upon the kind of explosive substance and upon its physical state. The burning rate of colloidal cellulose nitrate powders used as propellants in modern guns is in the order of 24 centimeters per second at average gun pressures, whereas the velocity of reaction of high explosives ranges from about 2,000 to 8,500 meters per second.

2. *Heat.* An explosive reaction is always accompanied by the rapid liberation of heat. The amount of heat represents the energy of the explosive and hence its potentiality for doing work. It may be supposed that the quantity of heat given off by an explosive reaction is large, but this is not necessarily the case. A pound of coal, for example, yields five times as much heat as a pound of nitroglycerine. However, coal cannot be used as an explosive, because it fails to liberate heat with sufficient rapidity.

3. *Gases.* The principal gaseous products of the more common explosives are carbon dioxide, carbon monoxide, water vapor, nitrogen, nitrogen oxides, hydrogen, methane, and hydrogen cyanide. Some of these gases are suffocating; some are actively poisonous. The gases from low explosives are rarely dangerous, since they usually escape at once into the open and are dissipated and diluted with air. Generally speaking, the commonly used high explosives produce a large proportion of noxious gases, which are particularly dangerous, since under normal conditions of use these gases do not dissipate rapidly. Projectiles filled with high explosives often burst after penetration into confined spaces from which the gases are not easily evacuated.

Some of the gaseous products of explosive reactions are themselves flammable, or form explosive compounds with air. Among these are hydrogen, carbon monoxide, and methane. The flame at the muzzle of a gun when it is fired results from the burning of these gases in air. Similarly, residues of the explosive mixture remaining in the gun, or blown back by adverse winds, have been known to ignite when brought into contact with air as the breech is opened. The ignition may come from the high temperature of the gas or from the burning residue in the gun bore. The resulting explosion may transmit flame to the rear of the gun, producing what is called a *flareback.* Flarebacks may ignite fresh powder charges being served to the gun. This danger has led to the adoption of gas-expelling devices on guns installed in enclosed compartments or mounts.

4. *Pressure.* The high pressure accompanying an explosive reaction is due to the formation of gases which are expanded by the heat liberated in the reaction. The work which the reaction is capable of performing depends upon the volume of the gases and the amount of heat liberated. The maximum pressure developed and the way in which the energy of the explosion is applied depend further upon the velocity of the reaction. When the reaction proceeds at a low velocity, the gases receive heat while being evolved, and the maximum pressure is attained comparatively late in the reaction. If, in the explosion of another substance, the same volume of gas is produced and the same amount of heat is liberated, but at a greater velocity, the maximum pressure will be reached sooner and will be quantitatively greater. However, disregarding heat losses, the work done will be equal. The rapidity with which an explosive develops its maximum pressure is a measure of the quality known as *brisance.* *A brisant explosive* is one in which the maximum pressure is attained so rapidly that the effect is to shatter material surrounding it or in contact with it.

2B5. Sensitivity of explosive substances

The amount of energy necessary to initiate explosion is the measure of the sensitivity of the explosive. Sensitivity is an important consideration in selecting an explosive for a particular purpose. For example, the explosive in an armor-piercing projectile must be relatively insensitive; otherwise the shock of impact would detonate it before it had penetrated to the point desired. Again, if the molecular groups in the explosive are in such unstable equilibrium that the reaction starts spontaneously, or in response to a slight blow, the substance can have no practical application whatever.

It was originally considered that the power of an explosive was measured by the sensitivity and that the most powerful explosives were the most sensitive. Investigation has proved that this is not true. TNT is a good example of a very powerful explosive which under ordinary circumstances requires a severe shock to initiate explosion.

2B6. Initiation of explosive reactions

An explosive reaction is initiated by the application of energy. The preferred method of initiation depends on the characteristics of the individual explosive. However, in accordance with the dual classification of explosives into *low* and *high*, the two methods of initiation commonly distinguished are:

1. *By heat.* Low explosives are commonly initiated by heat; and the resulting reaction is a burning process, which occurs on the exposed surfaces of the substance and progresses through the mass as each layer is consumed. Some high explosives will react when sufficient heat is applied, especially if heat is applied suddenly throughout the mass. Initiation by percussion (direct blow) or by friction is simply another form of initiation by heat derived from the energy of the blow or friction.

2. *By shock.* High explosives, such as the main charges of mines or torpedoes, in general require the sudden application of a strong shock or detonation to initiate the explosive reaction. This detonation is usually obtained by exploding a smaller charge of a more sensitive high explosive that is in contact with or in close proximity to the main charge. The smaller charge can readily be exploded by heat or shock.

It has frequently been demonstrated that detonation of an explosive mass can be transmitted to other masses of high explosive in the near vicinity, without actual contact. The second explosion occurring under these conditions is said to be initiated by *influence,* and it has been generally accepted that the initiating effect is the result of the passage of an explosive percussion wave from one mass to the other. The second explosion is called a *sympathetic explosion.* The distance through which this action may take place varies with the kinds of explosive, the intervening medium, and certain other conditions. The tremendous energy of the percussive wave in an underwater explosion is evidenced by the immediate upheaval of the water when the explosion occurs. The geyser-like eruption which occurs shortly afterwards is caused by the rise of the gases of the explosion to the surface.

2B7. The explosive train

Modern explosive devices, even of simple types, very rarely contain one explosive or explosive component only. They commonly apply the principle of chain reaction, in which a chain or train of elements functions in sequence. The first part of the train, called the *initiator, primer, cap,* or *detonator,* begins the action when set off by an electric current, shock, heat, friction, or some other stimulation. The heat or shock of explosion of this first part of the train sets off one or more succeeding parts in sequence. Depending on their functioning, these are called *ignition, booster,* or *auxiliary* charges. The final link in this intermediate sequence (which may consist of one or more such links) ignites or detonates the main (*burster, disrupter,* or *propellent*) charge.

There are two main types of explosive train, depending on the purpose and nature of the main charge. Propelling or impulse charges are low explosives intended to develop, through rapid burning, energy to be used for propulsion. An explosive train for a propelling charge generally begins with a primer which produces a hot flame. This sets off the ignition charge (composed of a flame-producing explosive—black powder). Last in the explosive train is the propellent powder or grain itself, which burns to produce the hot high-pressure gases which propel the gun projectile or rocket.

In the explosive train designed to detonate a high explosive, the sequence of operation in general depends on the transmission and amplification of shock rather than a hot flame. The initiating device contains a sensitive explosive which produces shock when set off; the initiating shock sets off the booster or a series of boosters or auxiliaries; the magnified shock detonates the main charge. The booster may be composed of the same explosive as the main charge, but in more sensitive form. Thus, granulated TNT, which is more sensitive than the cast variety, is used as a booster in depth charges.

2B8. Classification of explosives according to service use

Naval explosives may be classified according to the use to which they are put:

1. *Propellants and impulse explosives.* These explosives are used to propel projectiles from guns, to propel rockets, launch torpedoes, launch depth charges from projectors, and catapult aircraft. They are all *burning* or *low* explosives. Examples are smokeless powder, ballistite, Cordite, and black powder. Figure 2B1 shows smokeless powder grains of various sizes.

2. *Disrupting explosives.* Explosives of this classification are all employed to create damage to the target under attack. They are all of the *high* explosive

type and are used alone or as part of the explosive charge in mines, bombs, depth charges, and torpedo warheads, and in projectiles as a burster charge. There is a wide variety in this category, but the more common examples are RDX, TNT, ammonium picrate, and tetryl.

3. *Initiating (primary) explosives.* As explained in article 2B6, the initiation of an explosive reaction requires the application of energy in some form. Propellants are commonly ignited by the application of flame, while disrupting explosives are set off by a severe shock. Many primary explosives can be used for initiating either propellants or disrupting explosives, because they produce both a flame and a shock when exploded.

The device used to initiate the burning of a propellent explosive is called a *primer*. A simple primer consists of a small amount of lead azide and a small charge of black powder in a container. When fired, the primer produces the long, hot flame required to ignite the propellant.

The device used to initiate the reaction of a disrupting explosive is called a *detonator*, and in most cases it consists of a charge of lead azide or lead styphnate either alone or with granular TNT or tetryl in a container. When fired, the detonator produces the shock necessary to initiate the explosive reaction.

4. *Auxiliary explosives.* Large propellent charges and relatively insensitive disrupting explosives require an intermediate charge, so that the flame or shock of the initiating explosive may be increased to ensure proper reaction of the main explosive charge. The intermediate or auxiliary explosive used with propellants is called an *ignition charge* and consists of a quantity of flame-producing black powder sufficient to engulf the propellent grains. The auxiliary explosive used with disrupting explosives is called a *booster* and consists of a quantity of more sensitive high explosive, such as tetryl or granular TNT. The booster increases the shock of the detonator to a degree sufficient to explode the disruptive charge.

C. Service Explosives; Propellants

2C1. General

The primary function of a propellant is to provide pressure which, acting against the object to be propelled, will accelerate the object to the required velocity. This pressure must be so controlled that it will never exceed the strength of the container in which it is produced (e. g., guns, torpedo tubes, and depth charge projectors). The control of pressure produced by propellants and impulse charges is treated in considerable detail in the chapter on interior ballistics.

It would be possible to use any explosive for propellent purposes if the velocity of explosion could be controlled. Investigations of this problem led to the development of smokeless powder as we know it today. Nitrated cotton, the main constituent of smokeless powder, is a high explosive by itself and entirely unsuitable as a projectile propellant. However, it was discovered that this high explosive could be colloided with an ether-alcohol mixture to produce a "burning" explosive. Only a small number of chemical compounds can be so treated as to permit control of the velocity of explosion. Furthermore, the substance in its final state must not only be efficient, but must be safe in use, easy to handle, and stable under varying conditions of storage for protracted periods of time.

Smokeless powders of one form or another are now used almost universally for propellent charges. For military purposes (especially for guns larger than small arms) they may be considered to be of two classes: (1) single-base powders, and (2) multi- (double or triple) base powders.

In the single-base powders, cellulose nitrates (referred to hereafter as nitrocellulose) form the only explosive ingredient. The other materials present in single-base powders are included to obtain suitable form, desired burning characteristics, and stability.

In the double- or triple-base powders, nitroglycerin is present to assist in dissolving the nitrocellulose during manufacture, as well as to add to the explosive qualities. The single-base nitrocellulose powders produce a greater volume of gas, but less heat than the double-base powders. From a thermodynamic standpoint, single-base nitrocellulose powders are somewhat less efficient, because of their lower burning temperatures. But they have the advantage of causing less wear in the gun bore than double-base powders do. Present triple-base powders, however, have a large proportion of the "cool"-burning explosive nitroguanidine; they therefore produce maximum temperatures comparable to those of single-base powders. Triple-base powders also have other advantages, which are mentioned in article 2C5.

2C2. Smokeless powder manufacture

The smokeless powder used by the United States Navy is a uniform ether-alcohol colloid of carefully purified nitrocellulose to which is added a small quantity of diphenylamine to assist in preserving the chemical stability of the powder. The principal raw materials used in the manufacture of United States Navy smokeless powder are:

1. *Cotton.* The cellulose material to be nitrated consists of bleached and purified short-fibered cotton, which is 90 percent pure cellulose.

2. *Acids.* A mixture of about 1 part nitric acid to 3 of sulphuric acid by weight is used in the nitrating process.

3. *Ether and alcohol.* A mixture of ethyl ether and ethyl alcohol is used as a solvent for the nitrocellulose.

4. *Diphenylamine.* This substance, used as a stabilizer, has a slightly alkaline reaction and is incorporated in the powder to neutralize any acid products which might be formed as a result of gradual decomposition of the powder. Since it thus prevents decomposition from becoming progressive, it adds to the stability of the powder.

The principal steps in the manufacture of United States Navy smokeless powder are as follows:

1. *Preparing the cellulose.* The purified cotton is passed through picking machines which tear apart the knots and tangles, and then through driers which reduce the moisture content to about 1 percent, moisture being undesirable in the nitrating process.

2. *Nitrating.* The cotton and acids are thoroughly mixed and agitated in nitrators. The cotton is converted into nitrocellulose containing about 12.6 percent nitrogen. This is commonly called "pyro." After nitrating, the pyro and excess acids are sent to a centrifugal wringer below the nitrator, where the spent acids are removed.

3. *Purifying.* The pyro is immersed in water and run through flumes to boiling tubs where it is given a preliminary boiling for about 40 hours to remove the remaining free acids. It is then transferred to pulpers which cut and grind it to the desired consistency. The pyro is then boiled in water in poaching tubs for 12 hours, during which time the water is changed at regular intervals.

4. *Dehydrating.* After the final stage of purification in the poaching tubs, the pyro is transferred to the dewaterers (large rotary filters equipped with wet vacuum pumps) and to centrifugal wringers which remove water. The remainder of the water is forced out by placing the pyro in the cylinder of a hydraulic press and forcing alcohol under pressure through it. The pyro cake formed is subjected to a final pressure treatment to remove excess alcohol, leaving only sufficient alcohol for making the desired colloid.

5. *Mixing.* The compressed pyro cake is now placed in rotating drums and block breakers and broken up into a coarse, fluffy mass. It is then put into mixing machines where ether and diphenylamine are added. The charge is mixed for about 30 minutes, during which it becomes partially dissolved or colloided by the ether and alcohol.

6. *Granulation.* After mixing, the charge is reformed into a block and taken to a press where it is first forced through the small holes of a strainer (macaroni) press to ensure a thoroughly mixed and uniform colloid and to eliminate lumps and foreign matter. It is again reblocked and taken to a graining press, where it is forced through the die and extruded in the form of a continuous cord of circular cross section with seven longitudinal perforations. The cord immediately passes to the grain cutter, which cuts it into grains of uniform length. In this form, it is known as "green" powder and is still fairly soft and pliable because of the excess of solvents which it contains.

7. *Drying.* After a special heat treatment for recovery of most of the solvents, the green powder is removed to large *dry houses,* where the solvent content is reduced to a predetermined amount. The drying process takes 4 to 6 months, depending on the percentage of residual volatiles desired and the size of the grain required. The percentage of residual volatiles remaining in each powder after drying varies from 3 to 7 percent, being greater in the larger granulations. After drying, the powder is blended with other poacher lots to make up one uniform lot of powder. Samples of this lot are proof-fired, and after acceptance the lot is assigned an index number. It is then ready for issue to the Fleet.

2C3. Characteristics of smokeless powder

Grains of smokeless powder have a hard, smooth finish and look very much like horn. When new, the grains are amber in color and are translucent. As the powder ages, its color becomes dark brown, then black, and finally opaque. These changes do not indicate any loss of stability.

Smokeless powder is subject to a very gradual chemical decomposition which may in time be a source of danger (spontaneous combustion) unless measures are taken to arrest such action. Like many explosive compounds, smokeless powder is in a state of unstable chemical equilibrium and is readily acted upon unfavorably by impurities which may be present with it. If decomposition takes place in any particle, the decomposition products will include nitrogen oxides which have an acid reaction and will facilitate further decomposition. The use of diphenylamine, whose action has already been explained, has greatly increased the stability life of smokeless powder. A powder which may have become *chemically* dangerous through partial decomposition is not dangerous for use in a gun, since a part of the decomposition which should take place in the gun, with sudden evolution of heated gases, has already taken place and the powder has lost a corresponding number of heat units.

Excessive heat has a most unfavorable influence upon the stability of smokeless powder. At temperatures below 60° F., the stability is not appreciably affected, but at temperatures above 70° F., the rate of decomposition rises quickly, becoming high at 90° F., and dangerously accelerated at temperatures over 100° F. Precautions must therefore be taken to ensure the maintenance of a uniformly low temperature in the magazines in which powder is kept.

Since the presence of moisture favors decomposition of smokeless powder, the containers in which it is stored are made airtight, and every effort must be made to maintain their tightness. A leaky container may not only admit undesirable moist air to the powder, but may also permit the loss of volatiles through evaporation, especially if the air in the container is subjected to alternate expansion and contraction due to change in temperature. Such a loss of volatiles will increase the speed of burning of the powder to such an extent that excessive pressures will be produced in the gun. In this event the powder is *ballistically* dangerous.

2C4. Triple-base powder manufacture

Triple-base powder, commonly called Cordite N or SPCG, is composed of four principal ingredients—nitrocellulose (19 percent), nitroglycerine (a little under 19 percent), nitroguanidine (55 percent), and ethyl centralite (a little over 7 percent). Of these 4, the first 3 are explosives. Ethyl centralite (also called carbamite) is the stabilizer. A small amount of potassium sulfate may be added as a flash inhibitor, and for some calibers other ingredients may be added in small amounts.

The manufacturing process is in general similar to that for pyro powder. It begins with passing the dehydrated nitrocellulose through a block-breaker screen (or this may be done before the nitrocellulose reaches the Cordite production plant). Then the other dry ingredients (except the ethyl centralite) are mixed with the nitrocellulose for 6 minutes. Next, a mixture of nitroglycerine and acetone (which desensitizes the normally very touchy nitroglycerine) is added to the dry mix, and mixing continues for another half hour. Then the ethyl centralite is added and mixing goes on for another 3 hours. More acetone and alcohol may be added if required during this step. This stage may end with maceration of the mix, if required.

The mix, which is by now mostly in colloid form, next goes to a "macaroni" press which squeezes it through strainers to remove uncolloided nitrocellulose and bits of foreign matter that may be present. The "macaroni" is then pressed again into blocks, and is extruded through dies to give the final grain cross section. After this the extrusions are cut to proper grain length, and the powder goes to the final stages of its processing.

The "green" powder next goes through a combined screening-drying stage, in which clustered grains are separated, undersize grains and dust are screened out, and forced dry-air currents remove volatiles. After drying, the powder is blended with other lots and packed.

2C5. Characteristics of triple-base powder

Triple-base (Cordite) powder grains resemble in size and shape conventional pyro powder grains for the same caliber, except that they have smooth, chalk-white surfaces. After considerable time in storage, the surface color may tend to yellow, but this is not a sign of deterioration.

Triple-base powders are far more stable in storage than equivalent pyro powder, partly because of their relatively low nitrocellulose content, partly because of their extremely small content of volatile components, and partly because of their low hygroscopicity. They are much more suitable as gun propellants than double-base powders like ballistite (described below) because nitroguanidine, in contrast to the mixture of nitroglycerine and nitrocellulose in double-base powders, is a "cool"-burning explosive. The gases produced by a triple-base powder with nitroguanidine have much less erosive effect than those of a double-base powder. Triple-base powders also have advantages in reduced production cost and reduced residue after burning, although they do in general require a larger variety of ingredients than pyro powder. They are also less sensitive to high temperatures in stowage.

2C6. Shipboard tests and inspections of smokeless powder

The *Bureau of Ordnance Manual* gives the required periodic tests and inspections prescribed for smokeless powder aboard ship in order to ensure its safe storage.

For each index of powder aboard ship, a sample is provided in a glass bottle with a tight glass stopper, and is stored in the magazine containing that powder index. These *magazine samples* provide a means for daily visual examination of each powder index on board. A strip of methyl violet paper is kept in each sample bottle. Oxides of nitrogen, emanating as a gas from decomposing smokeless powder, will discolor the paper, changing it from violet to white. Such a change is a warning that the powder in the bottle and the powder of which it is a sample have begun to decompose.

Additional signs of decomposition which may be noted by daily visual examination are:

1. Discoloration of grains, especially grains with orange or yellow spots, or grains differing markedly in color.
2. Grains showing fine cracks, especially if they lack their normal gloss.
3. Friable or easily crumbled grains. This applies especially to the discolored spots on grains and to the off-colored grains.
4. The unmistakable presence of nitrous fumes as determined by sight or smell immediately on opening the container. Only in the very worst cases are the reddish-brown colored fumes likely to be visible. Care should be taken not to mistake the normal ether-alcohol odor for the characteristic pungent odor of the oxides of nitrogen.
5. The metal of the container showing signs of a green or white corrosion on the inside.
6. The powder is in a soft or mushy condition.

Conditions 1, 2, and 5 indicate some decomposition has taken place, but the powder may still be usable. Surveillance tests should be made immediately to determine the extent of decomposition. Conditions 3 and 4 indicate advanced decomposition; the powder should be turned in to an ammunition depot for disposition. Powder in condition 6 is very dangerous and should be thrown overboard immediately.

The surveillance test consists in putting a sample of the powder in a tight, glass-stoppered bottle into an electrically heated surveillance oven, and exposing it to a constant temperature of 65.5° C (150° F.). The sample under test is examined once daily until red fumes appear, or 60 days elapse. If the red fumes appear within a minimum time as specified in OP 4 for that particular powder (for example, 16 days for 5″/38 powder), notify the Bureau of Ordnance and request disposition instructions.

If fumes appear after the minimum period specified by OP 4, but before 60 days, the powder is reasonably safe, but surveillance tests must be conducted at frequent intervals. If red fumes do not appear in 60 days, the powder is safe.

Surveillance testing equipment is carried at present on relatively few types of ships—BB's, CA's, CL's, CAG's, AD's, and several types of carriers. The equipment is optional on AE's. Other types of ships send samples to ammunition depots for test.

In general, Cordite type (triple-base) powders are not tested in surveillance equipment. At present, Cordite powders are subjected to methyl violet paper tests just as pyro powders are. However, because triple-base powders contain less than 20 percent nitrocellulose, and are much more stable than pyro, violet paper is not as reliable an indicator of triple-base propellant stability as it is for pyro powders. Improved indicators and test methods are now under development.

2C7. Black powder

Black powder (originally called gunpowder), the oldest of explosives, has undergone little change in its composition from earliest times to the present. It consists of a mechanical mixture of approximately 75 percent saltpeter (sodium nitrate), 15 percent charcoal and 10 percent sulphur, although these proportions may be varied somewhat, depending on the use for which the powder is intended. First used in guns in the early 12th century, black powder was the only propellant for firearms until the latter half of the 19th century, when nitrocellulose powders were developed.

Black powder is unsuitable as a propellant for several reasons:

1. It leaves a large amount of residue, thus fouling the gun bore.
2. It makes large quantities of black smoke when it burns.
3. Its high temperature of combustion causes rapid erosion of the gun bore.
4. Its velocity of reaction is too rapid, even with very large granulations.

Although black powder possesses practically unlimited chemical stability if stored in airtight containers, it deteriorates irregularly when exposed to moisture, which it absorbs readily. Black powder is not affected by moderately high temperatures, nor is it subject to spontaneous combustion at ordinary storage temperatures. It is, however, highly flammable and very sensitive to friction, shock, sparks, or flame. It is extremely quick and violent in its action when ignited. The larger the granulation of black powder, especially when pressed or cut into pellets, the slower the rate of burning. Black-powder dust is exceedingly dangerous, and its accumulation during the handling of any black powder should be prevented. *Black powder is the most dangerous of all explosives handled aboard a man-of-war.*

The uses of black powder are dependent on the size of its granulations. In the order of decreasing grain size, the types and uses of black powder in the United States Navy are as follows:

1. *Grained.*—Torpedo and depth-charge impulse charges.
2. *Granular.*—Ignition charges for propellants and for saluting charges.
3. *Fine-grain.*—Primer charges; expelling charge in illuminating projectiles.
4. *Meal.*—Pyrotechnics and fuzes.

2C8. Solid rocket propellants

Solid rocket propellants are double-base compositions with added ingredients for plasticizing, control of burning rate, and reduction of flash. Gas pressure during burning is about one-tenth of that in a gun barrel, and erosion effect is not important in this application.

A typical propellent grain is made up of a composition identified as Type N–2 (JPN), and its main ingredients are nitrocellulose (slightly over 51 percent) and nitroglycerine (a little less than 43 percent). It also contains two plasticizers to ensure homogeneity of composition (these are diethylphthalate, around 3 percent, and a trace of Candelilla wax), about 1 percent of stabilizer (ethyl centralite), a little over 1 percent of potassium sulfate to reduce flash, and a small amount of carbon black to control burning rate. There are a number of other compositions also used for rocket propellent grains, but they are classified, and this one will serve as a specimen for study.

As manufactured, the propellant is produced in the form of a sheet about 5 inches wide, 33 inches long, and 0.06 to 0.09 inch thick. To be converted into the grain which actually goes into the rocket motor, several sheets are rolled into "carpet rolls" and put into a press. Under high temperature and pressure the propellant is extruded from the press through a die that gives it the cruciform (cross-shaped) or hollow cylindrical cross section required for the particular motor concerned. The charge is extruded as a homogeneous length of propellant, which is then cut and trimmed to grains of appropriate length. The grains are then turned in a special lathe to give them the proper dimensions for mounting in the motor. Single extruded rocket propellent grains range in size up to 60 inches in length and 6 inches in diameter.

From 1 to 4 grains of ballistite propellant are used as the propelling charge in a rocket motor. The grains are designed to burn at a uniform rate to provide a uniform thrust during burning. In cruciform grains provided with suitable plastic inhibitor strips the burning area, and hence the rate of gas production and the thrust, tend to remain constant throughout the burn time. In hollow cylindrical grains, plastic inhibitors bonded to the grain limit the burning area during the first part of the burn period. Cylindrical grains have holes at regular intervals to equalize the pressures inside and surrounding the cylinder.

Single grains for JATO units or for use as missile sustainer propellants are made as large as 25 inches in diameter and 10 feet long. Such grains are made by a casting process, and may contain ingredients other than the double-base mixture described above.

D. Service High Explosives and Primary Explosives

2D1. General

The list of substances which can be grouped under the term *high explosives* is a long one which, however, may be materially reduced by eliminating explosives not suited for military purposes. The following conditions must be considered in choosing a military high explosive. Depending upon its use, it must:

1. Have proper insensitivity to withstand:
   a. Shock of gunfire.
   b. Shock of impact against armor, if used for projectile filler.
   c. Shock of handling.
2. Have maximum power.
3. Have stability to withstand adverse storage conditions, heat, moisture, etc.
4. Be easy to handle, load, and manufacture.
5. Produce proper fragmentation.
6. Be cheap and available in quantity.

A number of high explosives are derived from coal-tar products. When coal is subjected to destructive distillation, coke, gas, and coal tar are obtained. Coal tar is a heavy liquid of a complex nature, which on further distillation will yield aromatic hydrocarbons (benzene, toluene, xylene, naphthalene, and anthracene) and aromatic alcohols (phenol and cresol). From these substances, or from other substances obtained from them, explosives may be made by nitration.

High-explosive charges are usually loaded by melting and pouring, if the kind of explosive substance used permits this treatment. This gives greater density of the charge and hence greater explosive effect in a container of given volume.

2D2. TNT (trinitrotoluene)

TNT, the most familiar of all military high explosives, is obtained from the nitration of toluene in three successive steps. TNT is a white crystalline substance when pure, and varies in shade from a light yellow to a dirty brown when impurities are present. When pure, it melts at about 80.5° C. (177° F.). TNT is neutral in reaction and, even under unfavorable conditions of moisture and temperature, does not form sensitive compounds by combination with metals. It has high chemical stability even when subjected to temperatures as high as 150° F. for considerable periods of time, and can withstand great variations in temperature.

TNT is relatively insensitive to shock, friction, or pressure. When ignited, unconfined, it burns slowly with a dense black smoke and without explosion. However, in a hot fire it will explode with violence. TNT can be melted and cast into any form desired. This property makes it a very convenient substance for explosive charges. The rate of detonation of TNT is about 7,000 meters per second.

In a cast form, TNT is rather difficult to detonate and usually requires a booster such as refined granular TNT to provide the shock necessary to ensure complete high-order detonation. TNT is not, however, as insensitive as one may suppose. Small particles of TNT have been known to detonate when scraped with a knife.

The presence of moisture in TNT adds greatly to the difficulty of detonating it and probably decreases its explosive force. It is, therefore, of greatest importance that TNT boosters be kept dry.

A dark-brown oily liquid frequently separates out of cast TNT, and may exude from the containers after a period of storage. This *exudate* consists of isomers of TNT and lower nitrotoluenes. (Isomers are substances having the same chemical formula but with molecular arrangements and melting points different from those of the original substance.) Such exudates are relatively insensitive, but when mixed with an absorbent cellulose material, form a low explosive which is easily ignited, burns rapidly, and may even be detonated. An accumulation of exudate is considered both a fire hazard and an explosive hazard. Exudates discovered when cast TNT is inspected should be immediately removed. Large cast TNT charges must not be stowed on wooden or linoleum-covered decks, nor on any material that is likely to absorb the exudates. Exudate may be removed with carbon tetrachloride or alcohol, or, if discovered before it hardens, by water and a stiff brush. Because of its sensitivity, exudate must never be removed by steel scrapers, nor should soap or other alkaline solutions be used to remove it.

TNT has many uses. It may provide main disrupting charges in projectiles, torpedo war heads, depth charges, mines, bombs, grenades, boosters, demolition charges, etc. It is more frequently used as a component in other explosives. For fuzes and boosters, only a refined granular or crystalline TNT of high melting point is used. For large charges such as those in mines, bombs, etc., cast TNT of one of the lower grades and lower melting points is ordinarily used. TNT is not sufficiently insensitive to be a satisfactory filler for armor-piercing projectiles.

TNT may be mixed with other materials for certain applications. For example, TNT, with its relatively low melting point (80.5° Centigrade when pure) can be *cast-loaded*—that is, it can be poured into the burster cavity of a projectile and permitted to harden. Many other high explosives have melting points too high for this technique. But by using TNT as a vehicle, it is possible to cast-load a mixture of TNT and some other explosive. Thus a mixture of TNT and RDX (to be discussed below) can be cast-loaded.

Two other fairly common mixtures including TNT are *amatol* and *tritonal*. Amatol is a mixture of TNT and ammonium nitrate, and is used in large aircraft bombs. The mixture is less expensive than straight TNT. Tritonal is a mixture of TNT and aluminum powder. In this and other mixtures containing aluminum powder, the aluminum has the effect of improving the brisance of the explosive components, although it does not significantly affect the power of the explosive.

2D3. Explosive D (ammonium picrate)

This explosive, patented in 1888, was for many years the secret high explosive of the United States. Its particular importance as a military explosive lies in its marked insensitivity to shock and friction. It is only slightly inferior to TNT in explosive strength. It is a crystalline powder of light-yellow color which is loaded in projectiles by pressure tamping. It is only slightly hygroscopic, but, when wet, forms sensitive and dangerous picrates with copper and lead. Although it does not form dangerous compounds with iron, it does cause corrosion; the interiors of projectiles are therefore painted or varnished before being filled. It has high chemical stability, even when subjected for considerable periods of time to temperatures as high as 150° F. It cannot be melted and cast like TNT.

Explosive D is made by saturating a hot solution of picric acid (trinitrophenol) with ammonia water (ammonium hydroxide) or ammonia gas. This results in neutralizing the acid, which is shown by the formation of crystals. This solution, when the reaction is complete, is dumped into crystallization tanks, where the ammonium picrate crystallizes out. The crystals are removed, drained, and screened. The powder is then ready for packing.

Explosive D is used primarily as a burster charge for large-caliber armor-piercing projectiles, and armor-piercing bombs, as it will withstand the shock of impact against any thickness of armor. The advantage of this is, of course, that the armor-piercing projectile will have partially or completely penetrated the plate before it is detonated by the fuze action.

Aboard ship, Explosive D is found only in loaded projectiles or bombs and requires no special care, except to see that the projectile rooms are kept thoroughly dry and at moderate temperatures. In case of fire in the vicinity of projectiles, care should be taken that they do not become heated to a high temperature. No special tests or inspections of Explosive D are required afloat.

2D4. Tetryl (trinitrophenylmethyltrinitramine)

This high explosive is another aromatic nitrocompound. It is a yellow crystalline substance usually produced by the nitration of dimethylaniline.

Tetryl is more powerful than TNT and more sensitive to shock. It is stable at all ordinary temperatures, melting at 130° C. (266° F.). Tetryl is an excellent explosive for booster charges, especially in mines and torpedo war heads, which do not have to undergo the heavy shock of firing. Sometimes a mixture of tetryl and a primary explosive is used as a detonator.

2D5. RDX

This high explosive, known also as "Cyclonite" and "Hexogen", is a fairly recent development. It is a fairly sensitive explosive, and is more powerful than either TNT or Explosive D. It is produced by the nitration of hexamethylenetetramine, an organic compound derived from ammonia and formaldehyde. Purification is accomplished by crystallization from acetone. The crystals are then coated with beeswax or similar waxes to reduce the sensitivity of the material. In this form, RDX is insensitive enough to permit handling. Further additions of less sensitive materials are necessary before it can be used as a military explosive. The forms in which it appears in service are:

1. *Composition A.* A mixture of about 91 percent RDX and 9 percent beeswax or synthetic wax. Since this composition has about the same sensitivity as Explosive D but is more powerful, it is now being used as a projectile filler in place of Explosive D.
2. *Composition B.* A mixture of about 60 percent RDX, 40 percent TNT, and less than 1 percent wax. It is used as a projectile and bomb filler.
3. *Composition C.* A plastic mixture of about 90 percent RDX and 10 percent emulsifying oil—used to advantage as a demolition explosive because of its plastic form.

2D6. HBX

There are in service use two varieties of HBX—HBX-1 and HBX-3. HBX-1 is a cast explosive, consisting of a mixture of RDX, TNT, aluminum powder, and a desensitizer composed chiefly of wax. It is stable, relatively insensitive to impact, and more powerful than TNT. It is used in rocket heads as a burster charge.

HBX-3 differs from HBX-1 in having a much larger proportion of aluminum powder to increase its brisance. It is otherwise similar to HBX-1, but has much greater destructive effect underwater. It is therefore used in depth charges and other underwater explosive devices.

2D7. Primary explosives

Primary explosives are used in the early part of the explosive train, where sensitivity is important. For many years fulminate of mercury was the most important explosive used for this purpose. Because of its relatively poor keeping qualities, particularly under higher temperatures and in the presence of even a small amount of moisture, it is gradually being eliminated. Ammunition now being procured does not contain mercury fulminate.

The important primary explosives used in U. S. naval ammunition today are lead azide, lead styphnate, DDNP, tetracene, and nitromannite. To ignite a propellant, the primary elements in an explosive train must produce a hot flame of sufficient temperature, size, and duration for reliable action. To detonate a high explosive, the primary elements in the train must produce a shock sufficient to detonate the succeeding elements. The primary explosives mentioned above are used in these applications.

Detonators and primers differ chiefly in the auxiliary ingredients used to produce the effects desired. Thus, oxidizing agents such as nitrates or chlorates are added to increase impulse (shock effect) and sensitivity; abrasives like ground or powdered glass increase sensitivity to firing pin action; fuels such as antimony trisulfide increase flame energy. Explosive binders like nitrocellulose or nitrostarch are used to provide structure for the primary mixture and to hold it in place, and graphite or other electrical conductors are used to increase conductivity for electrical initiation. These components are used in various combinations, depending on the characteristics desired in the initiator.

For details concerning specific primary explosives and the design of explosive trains, see the *Ordnance Explosive Designer's Handbook,* published by the Navy as NOLR/1111.

Chapter 3

AMMUNITION

A. General

3A1. Definitions

Ammunition is the complete assemblage of the component parts, or *ammunition details*, which, together, make up a charge or round for any type of weapon.

Ammunition details include primers, boosters, detonators, powder, powder bags, cases, fuzes, projectiles, etc.

3A2. Classification of ammunition

Ammunition is classified by type stowage. The classification consists of the following types:

1. Gun ammunition.
2. Bomb-*type* ammunition.
3. Rocket-*type* ammunition.
4. Guided missiles.
5. Pyrotechnics.
6. Chemical ammunition.
7. Demolition material.
8. Miscellaneous.

3A3. Gun ammunition

Gun ammunition comprises 4 types: bag, semifixed, fixed, and small arms. The distinction between the first 3 depends on the manner in which the charges are assembled. In *bag* ammunition, the primer, propelling charge, and projectile are separate units. In *semifixed* ammunition, the primer and propelling charge are contained in one unit, while the projectile is separate. In *fixed* ammunition, all 3 components are assembled in 1 unit. *Small-arms* ammunition will not be discussed in this text.

3A4. Bomb-type ammunition

Bomb-type ammunition is characterized by thin-walled containers, loaded with relatively large bursting charges. This ammunition depends for its effect upon the destructive blast of the explosive, rather than any penetrating qualities of the container. Included in the group are torpedo war heads, mines, depth charges, and some aircraft bombs. Some bombs are discussed in this chapter; for further information on bombs, see *Naval Airborne Ordnance*, NavPers 10826. Other bomb-type ammunition is taken up in chapters 12–14 of this text.

3A5. Rocket ammunition

A rocket consists essentially of a *head* and a *motor*. The head may be solid or may contain a bursting charge. The motor contains fuel, either in the form of a large grain of powder or a liquid. The burning of the fuel releases the energy necessary for propulsion. To stabilize its flight, the rocket either has fins on its after end, or is made to spin by exhausting the motor gases through canted nozzles. Rockets are described more fully in chapter 11.

3A6. Guided missiles

A guided missile is an unmanned vehicle moving above the earth's surface, whose trajectory or flight path is capable of being altered by mechanisms within the vehicle. Guided missiles include, besides such control mechanisms, explosive war heads and power plants, usually of the rocket or jet type. For additional data on this subject, see chapters 11 and 29.

3A7. Pyrotechnic ammunition

Pyrotechnic ammunition may be classified according to use into three types: (1) signaling, (2) illuminating, and (3) marking. Pyrotechnic materials are mixtures of oxidizing agents and combustibles (powders such as magnesium and chlorate mixtures) to which other compounds may be added for such particular purposes as to color the flame or smoke.

3A8. Chemical ammunition

Included under this classification are all projectiles, bombs, grenades, candles, or other containers of compounds the purpose of which is to produce, when liberated, gas, smoke, or fire. Also, free fluids or gases released from aircraft tanks, projectors, or sprayers are designated as chemical agents.

Chemical ammunition may be designated according to the type of container, as *projectile, bomb*, or *gre-*

nade. However, the more usual classification, and the one used for storage purposes, is according to the nature of the filling:

Group A. Persistent vesicants. Vesicants blister the skin. The usual ones are mustard gas and lewisite.

Group A-1. Nonpersistent lethal gases. These gases, such as phosgene, injure the body when applied externally, breathed, or taken internally. Protection is not required in the open for more than 10 minutes if the wind velocity exceeds 2 mph.

Group B. Lacrimators and smokes. A lacrimator such as CH (chloracetophenone) is used primarily to cause weeping and irritation of the throat and lungs. The smokes, such as FM (titanium tetrachloride) and FS (sulphur trioxide in chlorosulfonic acid) are used for screening but have an irritant and, in enclosed spaces, a toxic effect.

Group C. Spontaneously inflammable agents such as WP (white phosphorus).

Group D. Readily inflammable mixtures such as TH (thermite), which burn rapidly and with extreme heat.

Chemical warfare is a specialized field which calls for specially trained men. The storage of chemicals requires extraordinary safety precautions. Although poisonous gases were not used in World War II, the Navy was prepared for defense and for reprisal in case the enemy initiated such tactics. Chemical warfare creates many problems in ship protection and decontamination which are the responsibility of the Damage Control Officer and are outside the scope of this book.

3A9. Demolition material

Explosives intended for such uses as blasting, eliminating hazards to navigation and obstacles to amphibious landing, and destroying gear to prevent capture by the enemy, comprise demolition material.

The use of blasting charges is a specialized art, requiring intensive training. Demolition techniques are taught in special Navy schools and will not be discussed in detail in this text. For major blasting operations, various forms of dynamite are used; but dynamite normally is not carried aboard ship.

Half-pound *demolition charge blocks*, consisting of either pressed TNT or cast TNT and tetryl, are issued to ships for general use. Large demolition charges, also consisting of TNT, and assembled with half-pound booster charges, are also issued for major projects, such as scuttling vessels. Charges of both of these types are detonated by means of *blasting caps*, set off by electric current.

Aboard ship, in wartime, there are mechanical devices the nature of which, preferably even the very existence of which, must under no circumstances become known to the enemy. Because highly classified instruments must be completely destroyed if capture or abandon ship is imminent, tiny bombs, called destructors, are attached to them, to be actuated at a moment's notice. Usually, they contain lead azide or TNT-tetryl, with proper electric ignition elements.

3A10. Shaped charges

Relatively small quantities of explosive known as shaped charges can be made to pierce heavy steel plate by employing them as *shaped charges* which direct the explosive force into a small and concentrated jet. This jet supplies a directional damaging action.

In an ordinary bursting charge the expanding detonation wave proceeds outward from the point of detonation, producing stresses on all portions of the enclosing case. The casing bursts into fragments under the action of these enormous forces. In a shaped charge, however, a portion of the case (fig. 3A1) farthest from the detonator is in the form of a regular cavity (usually a cone, hemisphere, or V-shaped groove) so that the detonation wave fronts impinging progressively over that portion of the case will cause compression toward the center of the cavity. Under the influence of this high-velocity compression, the portion of the case forming the cavity and known as the *liner* gasifies under the extreme pressures and temperatures. Most of it squirts forward in a narrow jet away from the advancing detonation wave. The front of this jet is composed of a large number of gaseous metallic particles moving at speeds of 20,000 to 30,000 feet per second. This is followed by the *slug*, consisting of moving particles, the residue of the highly compressed liner (or slug), and fragments from the skirt of the liner. Penetration is achieved when the high-velocity jet particles impinge upon the target somewhat in the manner that a stream of machine gun bullets entering the same hole would penetrate an earth bunker. The slug plays no role in penetration. Although confinement increases the penetration of the jet in some cases, the increase is slight and most shaped charges have only light confinement. A well-designed shaped charge will penetrate armor up to three times the diameter of the cone.

One important factor in the effectiveness of a shaped charge is the distance of the charge from the target surface at the instant of detonation. This distance, called *stand-off distance*, is necessary to permit effective focusing of the gaseous jet.

In demolition charges the stand-off is obtained by legs which hold the shaped charge at the proper distance. When a shaped charge is employed in gun projectiles or rockets, the nose will begin to crush before the fuze can detonate the charge. The nose is

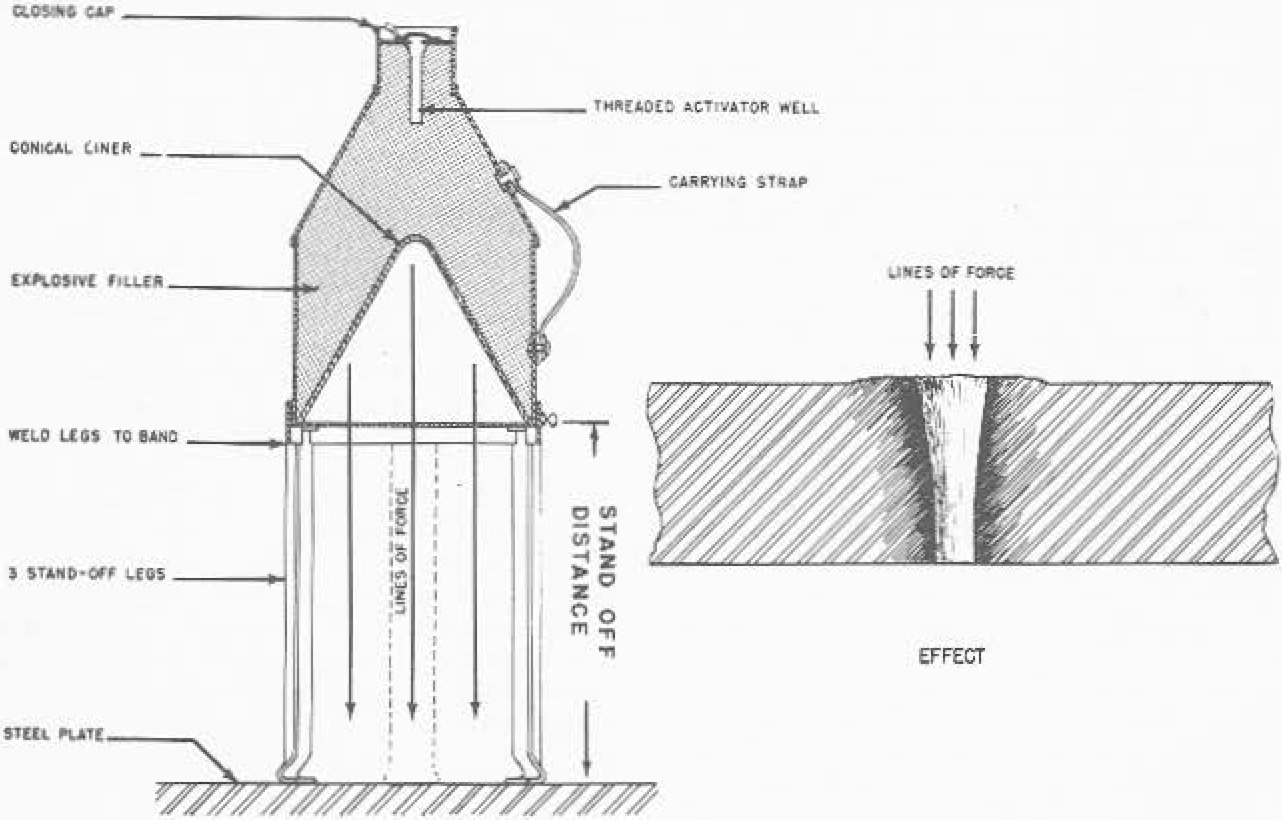

FIGURE 3A1.—Shaped charge and its effect.

therefore longer than the required stand-off distance by an amount calculated to allow for this crushing between time of impact and fuze functioning. In general the stand-off distance at the time of detonation should equal the diameter of the shaped-charge cone.

In addition to the penetrative properties of the shaped charge, the accompanying blast and fragmentation are important considerations. One new 5-inch rocket head is multipurpose in that it can be used for blast damage, fragmentation damage, or defeat of armor by shaped charge effect.

3A11. Miscellaneous types

Under this heading are grouped a variety of types for special purposes such as impulse ammunition, blank ammunition, trench warfare ammunition, and dummy ammunition.

An *impulse* charge is a propelling charge designed to project a missile a short distance. It usually consists of black powder and is assembled in a cartridge case with primer. Torpedoes are propelled from above-water torpedo tubes by impulse charges. Impulse charges are also used for propelling depth charges.

Trench-warfare ammunition, still so designated in spite of the change in the concept of trench warfare, includes hand and rifle grenades and mortar ammunition. It is issued to Marines and special landing forces.

Blank ammunition contains no projectile but consists of a cartridge case with primer and powder charge. It is used to make a noise for saluting, or a smoke for signaling, and for training exercises.

Dummy ammunition includes any type of ammunition or any ammunition detail assembled without explosives. This type is used for training and test and is carefully marked so that it will not be confused with service ammunition.

B. Propelling Charge

3B1. Gun ammunition

Propelling charges with their containers, primers, projectiles, and projectile fuzes are the major components of a complete round of gun ammunition, whether bag, semifixed, or fixed. Each of these components will be examined in some detail in the remaining sections of this chapter. Each of the many naval guns is provided with its own associated ammunition, designed in normal service use to impart to its projectile a specified velocity at the muzzle called *initial velocity* (abbreviated I. V.). Special powder charges may also be provided for use in experimental work, shore bombardment, or target practice when reduced velocity is desired. Unless such reduced charges are specifically designated, it will be assumed throughout this discussion that service I. V. are meant. Figure 3B1 shows typical rounds.

3B2. Bag ammunition

In bag ammunition the propelling charge is a separate unit. Large guns require large quantities of propellent powder to attain required projectile initial velocity. If the total amount of powder required for a 16-inch gun were placed in a single rigid container, the size and weight would make loading exceedingly difficult and slow. By packing the powder grains in fabric bags, it is possible to divide the charge into units each of which can be expeditiously handled by one man.

Bag charges are used in the United States Navy at the present time in some 8-inch guns and all guns larger than 8-inch. As recently as the beginning of World War II, bag-type 5- and 6-inch guns were still in use. The largest guns in present use, the 16"/50 caliber on the newest battleships, use six powder bags with each projectile.

3B3. Powder bags

The material used for powder bags is silk, because only this fabric will completely burn away when combustion of the charge takes place, leaving no smoldering residue to cause the premature explosion of the next charge loaded. Each bag is roughly cylindrical in shape. One end consists of an *ignition pad* containing black powder quilted into the fabric so as to keep the black powder evenly spread throughout the pad. Light-weight cloth, dyed red, is used for the ignition pad. A heavier weight of fabric is used for the rest of the bag. Bags are fitted with handling straps and lacings, which can be used to take up any slack in the bag.

Powder may be placed in the bags in either of two ways. It may be dumped in with no regard for the positioning of the individual grains; this produces an *unstacked charge*. Or the grains may be arranged in layers with the axis of each grain parallel to the axis of the bag; this is a *stacked charge*. The latter results in a smoother, more compact bag and provides for faster, more complete, and more symmetrical ignition.

The firing of the separate primer used with bag guns can be relied on to set off the black powder in the ignition pad, but may not be sufficiently potent to initiate combustion of the smokeless powder grains directly. It is essential, therefore, that each bag of a charge be loaded into the gun with the ignition pad aft, facing the breech plug and within a few inches of the next bag or of the breech plug and primer. This factor also dictates that the total length of the powder bags comprising a charge should be nearly equal to the length of the chamber of the gun. When, therefore, a reduced charge is made up, the *number* and *length* of the powder bags are unchanged, but the diameter of each bag is reduced.

The powder bags used in a 16"/50 caliber gun are shown in figure 3B2. The markings on such a bag should be noted. Those on the body of the bag indicate the designation of the gun, the index or identification number and the weight of the smokeless powder, the fraction of a full charge represented by the bag and whether that charge is service or reduced, the initial velocity for which the charge is designed, and the initials of the inspector. Markings on the ignition pad indicate the number of grams of black powder contained therein.

3B4. Powder tanks

Storage of smokeless powder must be both airtight and watertight if standard performance is to be maintained. The diphenylamine stabilizer contained in smokeless powder prolongs the life of the powder but does not prevent deterioration under adverse conditions. Since powder bags are neither airtight nor watertight, they are stored in tanks. These powder tanks are, therefore, important pieces of ordnance equipment which must be properly maintained. Leaky tanks admit moisture and air and allow ether and alcohol volatiles to escape.

Several types of tanks are used, but all fulfill the same basic powder-storage requirements. Top covers are variously constructed but all are designed to permit quick opening, because the number of loaded tanks allowed to be open at any one time is strictly limited by safety precautions. All powder tanks have handling aids, the large tanks having lugs to fit slings and the smaller ones having handles.

Tanks for powder bags contain wooden spacers to prevent building of a static charge which might ignite the powder by a spark.

(Bag movement within the tank during handling causes the static charge. The spacer separates the igniter pads from the end of the tank to prevent sparking which would ignite the black powder in the pads.)

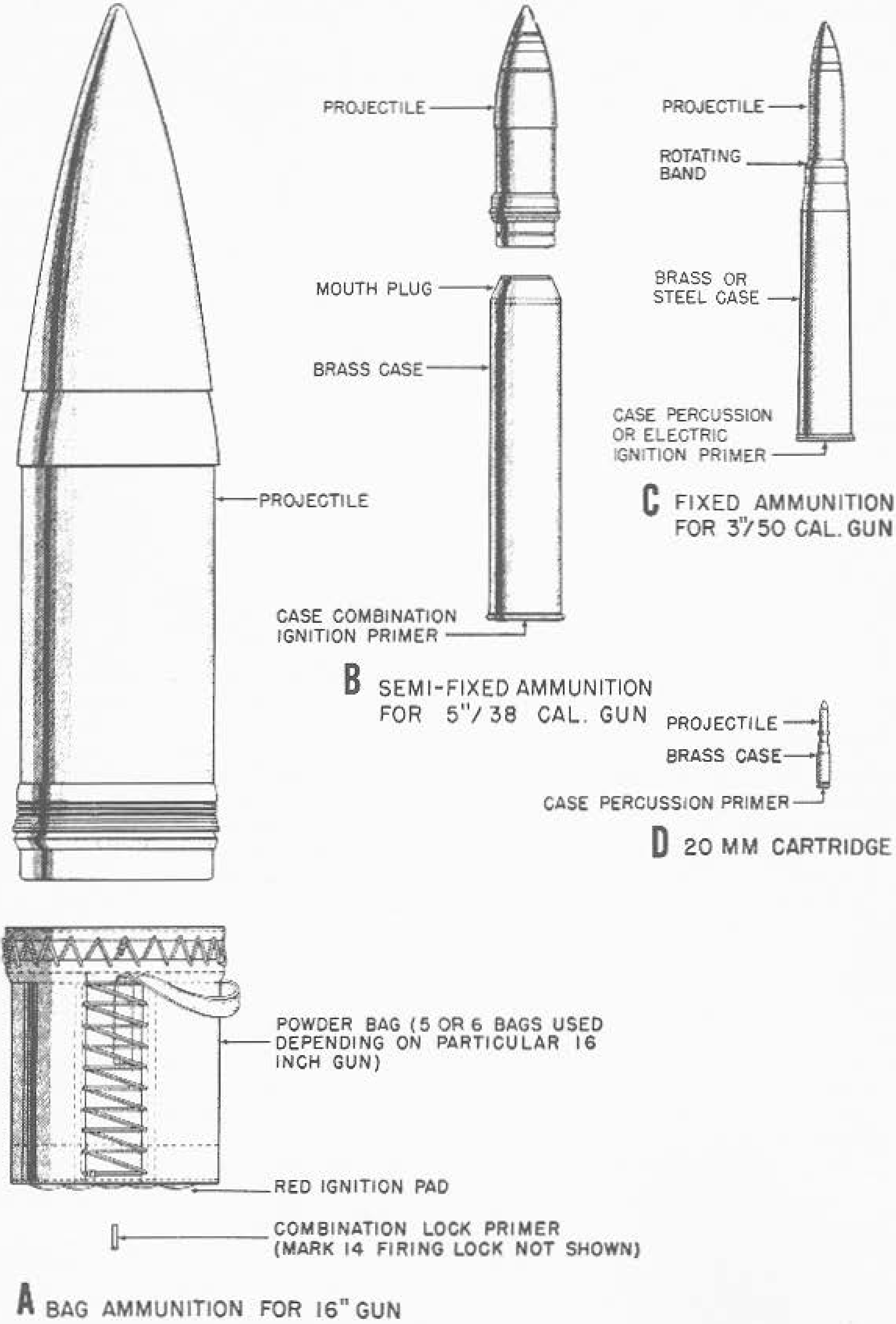

FIGURE 3B1.—Typical gun ammunition.

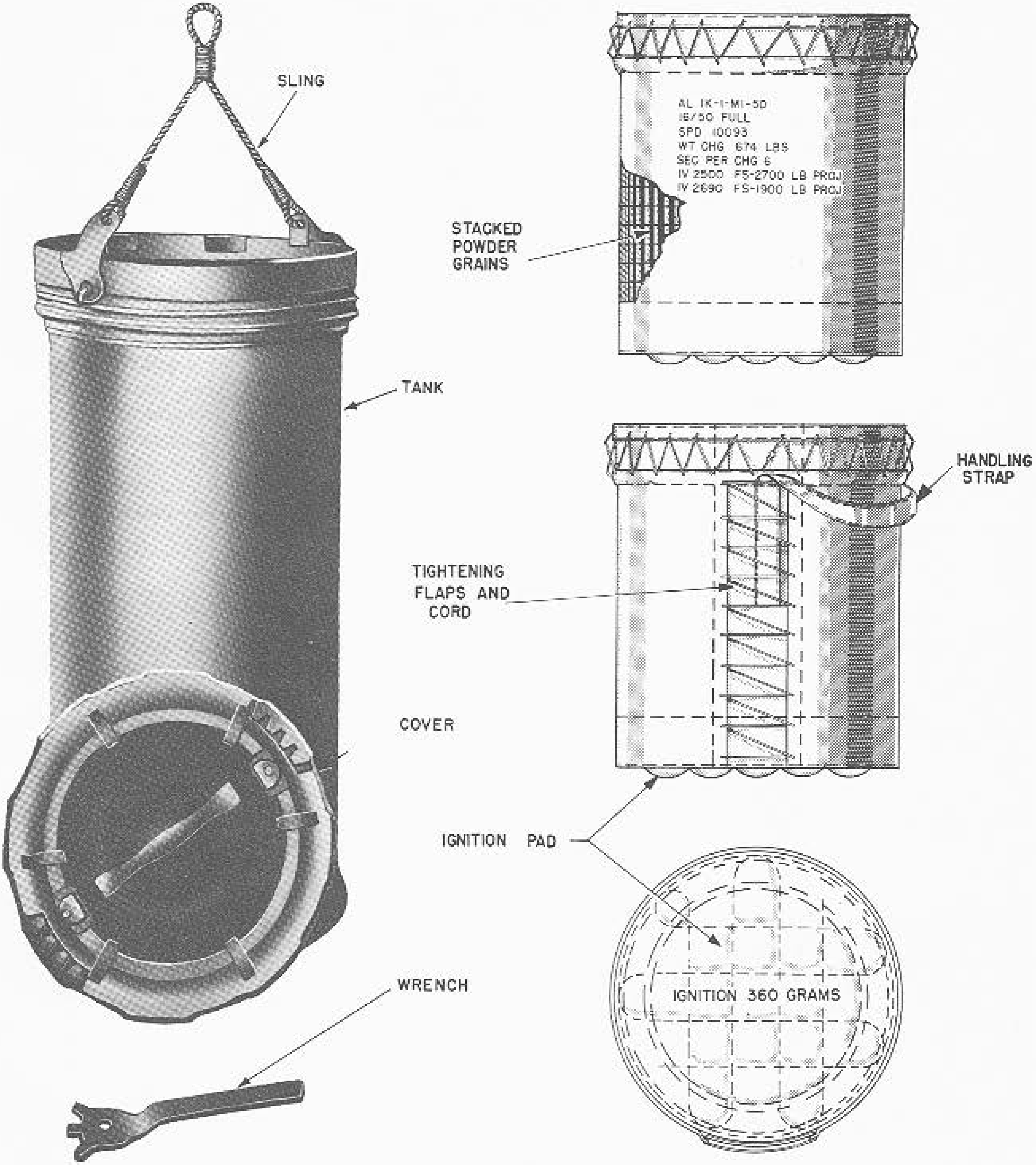

FIGURE 3B2.—Powder bags and storage tank for 16"/50 caliber gun.

3B5. Case ammunition

Gun ammunition which has its propellent charge in a metal *case* or *cartridge* instead of a bag is called *case ammunition.* (The term "cartridge" may also be applied to a complete round of small-arms ammunition.) Both semifixed and fixed ammunition are of this type. The factor that determines whether ammunition for a certain gun will be fixed or semifixed is the size and weight of a unit which can be handled by one man. Although mechanical improvements in loading tend to minimize this weight factor at the gun, it must still be considered in the supplying of reloads from handling rooms below. The primer in case ammunition is inserted in the base of the case at the ammunition depot and is not removed or changed aboard ship.

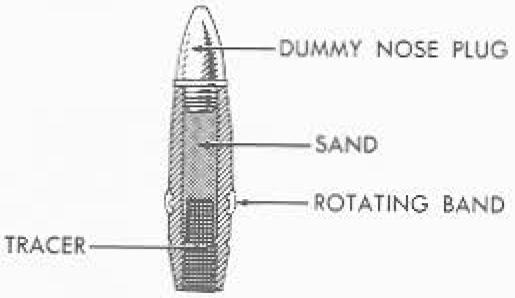

TARGET PROJECTILE

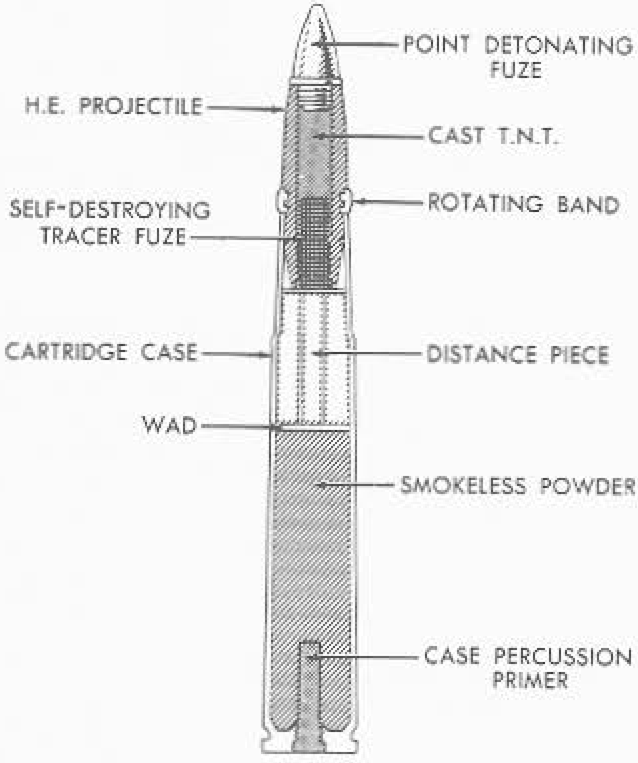

ANTIAIRCRAFT
(COMPLETE ROUND)

FIGURE 3B3.—40-mm ammunition (fixed).

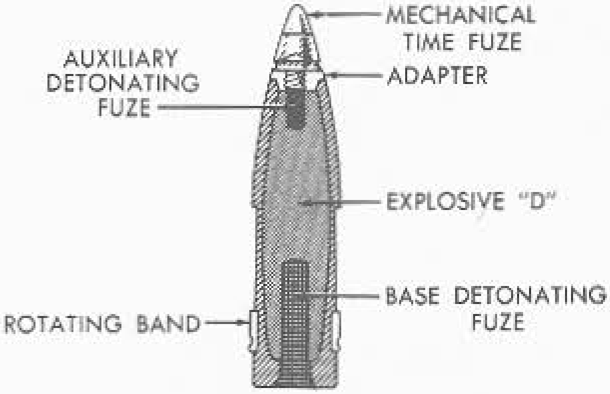

ANTIAIRCRAFT COMMON
PROJECTILE

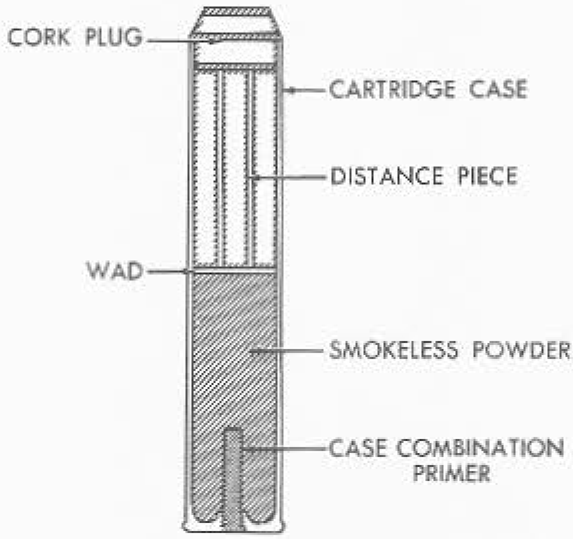

CARTRIDGE

FIGURE 3B4.—5"/38 ammunition (semifixed).

The designs of various sizes of case ammunition are similar, as may be seen from study of figures 3B3 and 3B4. The preparation of the case assemblies is comparable up to the point at which the mouth of a case is sealed. In fixed ammunition the projectile is the seal; a mouth plug is used in semifixed charges. There are four steps in the assembly of case ammunition: (1) priming, (2) loading the propellant, (3) fitting a *wad* and sometimes a *distance piece,* and (4) inserting the *projectile* or mouth plug. In priming, the primer used is either screwed (40-mm, and larger) or force-fitted (smaller cartridge ammunition) into the base of the case. The desired weight of smokeless-powder grains is then dumped loosely into the case. In 40-mm and larger guns, a cardboard disc, or wad, is forced into the case and a distance piece, if one is needed, placed on top. The mouth of a semifixed case is then sealed by the insertion of a mouth plug as illustrated by the 5″/38 case in figure 3B4. In fixed ammunition, the mouth of the case is sealed by forcing in the base of the projectile until the rear of the rotating band makes contact with the case.

A distance piece is made from a rectangular cardboard sheet, folded into a triangular shape and cut to the length necessary to fit the assembly, so that when placed between the wad and the case closure or mouth plug, it will hold the propellant firmly in place. A case mouth plug may be of cork, plastic, or cardboard and must be of sufficient strength to keep the contents of the case from spilling out under any conditions of handling or loading. In small-caliber ammunition, the fitting of wads and distance pieces may not be necessary if the propellant fills the case. The cartridge case itself is a hollow cylinder with either a straight or a bottle neck. The base has a rim around its circumference to facilitate extraction of the empty case from the gun. The empty cases can be reused several times after being reprocessed at an ammunition factory.

3B6. Case ammunition containers

Since leaks may exist around the primer and the projectile or mouth plug, the case cannot always be relied upon to remain airtight. Therefore like powder bags, case ammunition is transported and stowed in containers which provide air- and water-tightness. There are several types of tanks and boxes in service, and no attempts will be made here to describe them in detail. It is sufficient to state that regardless of varying design, the container must, above all, provide proper storage for smokeless powder. In addition, the container should be strong but not unduly heavy, should handle easily, and should open quickly. Metal tanks made of aluminum most nearly conform to these requirements, and tanks in current use are of either aluminum or steel construction. Metal tanks are also advantageous in that they provide good storage in ready service racks on deck, or in ammunition-handling rooms not equipped to provide the best storage conditions.

C. Primers

3C1. General

A primer is a device used to initiate a flame for the ultimate purpose of igniting a charge of propellant. In bag ammunition this flame is applied to the ignition pad (the auxiliary ignition charge) in the base of the powder bag, which in turn ignites the smokeless powder. In case ammunition the ignition charge is incorporated into the primer tube. Since the ignition charge incorporated in the bag can be proportional in size to the charge, the primers are the same for bag guns of all sizes. However, primers of different sizes must be used in cases of different sizes so that the amount of black powder in the primer may be proportional to the amount of propellant.

3C2. Types and classes of primers

Primers are divided into two types, depending on how they are used in the gun: (1) case, (2) lock. They are also divided into three classes, depending upon the method of firing: (1) percussion, (2) electric, (3) combination. *Percussion* primers are fired by the mechanical impact of a firing pin. *Electric* primers are fired by passing a current through a resistance filament surrounded by an initiating mixture. *Combination* primers may be fired by either of these methods.

The current trend is toward the use of electric primers only, in case guns of 3-inch and larger caliber. Except for 5-inch mounts and older 6-inch turrets, case combination primers are used only in short cartridge cases for clearing the barrel after a failure to fire electrically.

The following service primers are in current use:

1. Case percussion primer.
2. Case electric primer.
3. Case combination primer.
4. Lock combination primer.

3C3. Case percussion primer

This type is used in light and heavy machine guns such as the 20- and 40-mm. In ammunition for the smaller guns, which has a relatively small amount of propellant, the primer consists only of a cap, an anvil, and a percussion-sensitive mixture. The composition of the mixture varies with the amount of heat, flame, and sensitivity desired. In operation, the firing pin strikes the inverted cup which holds the primer cap. This indents the cup, forcing the cap against the anvil and exploding the pellet of initiating mixture. The

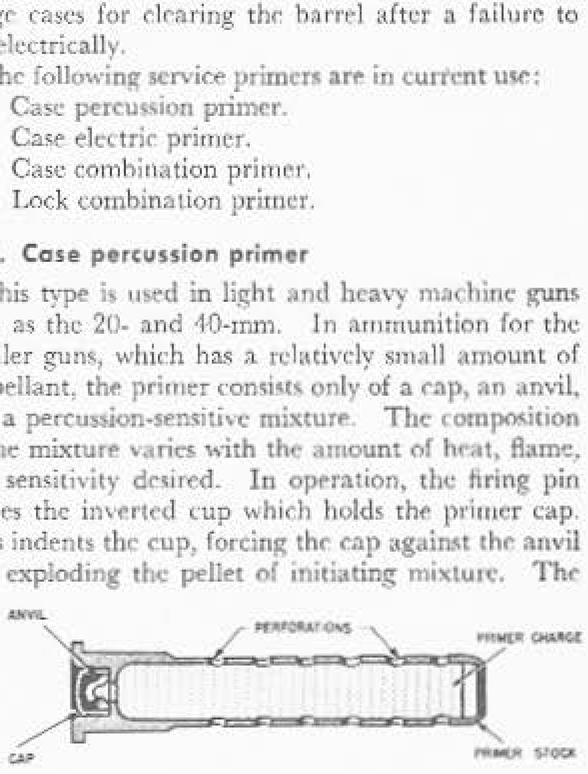

FIGURE 3C1.—Case percussion primer.

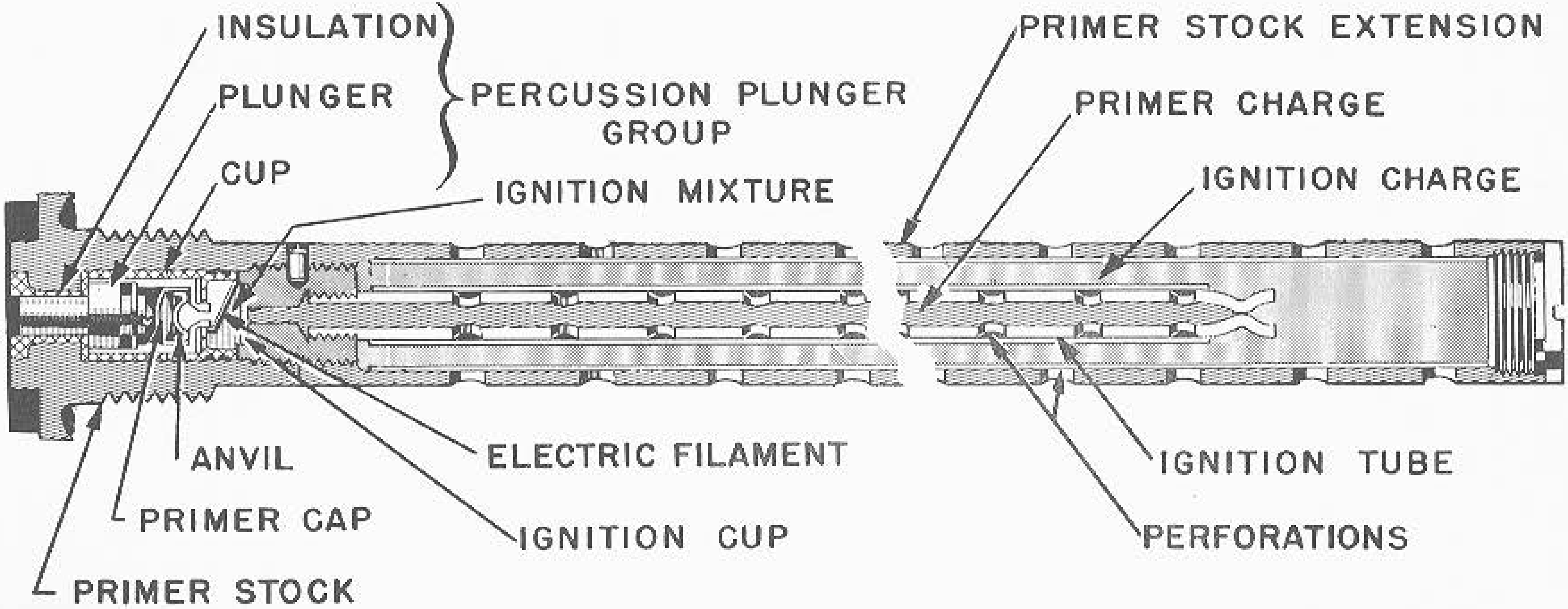

FIGURE 3C3.—Case combination primer.

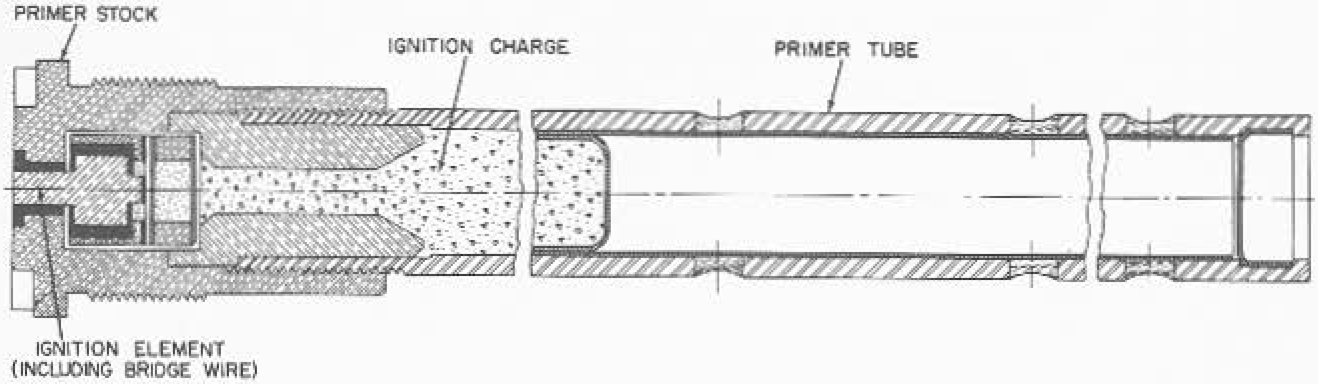

FIGURE 3C2.—Case electric primer.

resulting flame ignites the propellant. Where greater energy is required to ignite the propellant, the primer includes a black-powder charge which is ignited by the percussion cap. The 40-mm gun uses a primer of this type. See figure 3C1.

3C4. Case electric primer

Case electric primers (fig. 3C2) are used for the newer 3-, 5-, 6-, and 8-inch guns. These primers contain an electric ignition element which consists of two resistance filaments connected in parallel and surrounded by an explosive mixture, and a small black-powder primer charge. An electric current heats the filaments, which then ignite the explosive mixture. Flame from the initiating mixture ignites the black-powder primer charge, which in turn ignites the main black-powder charge of the primer.

3C5. Case combination primer

This type of primer is used in the 5″/38 caliber and the older 5″/54 and 6″/47 caliber guns. It is also used in clearing charges for all case guns of 3-inch caliber and larger. These primers can be fired, as indicated by their name, either by percussion or electrically. Electrical firing is considered the primary method; the percussion feature is a standby for use in the event that electric firing fails. The percussion element is similar to that of the case percussion primer, except that the firing pin strikes a plunger which in turn explodes the cap against the anvil. The flames produced by the primer cap act directly upon the powder in the electric ignition cup. See figure 3C3.

The electric element consists of a high-resistance wire wrapped in a wisp of guncotton and contained in a mixture of pulverized guncotton and fine black powder in the ignition cup. This wire is connected at one end to the percussion plunger group, which is insulated from the primer stock. The other end of the wire is grounded through the primer stock and the cartridge case to the metal of the gun. In firing the gun an electric current is passed through the firing pin to the plunger; this heats the bridge wire, igniting the wisp of guncotton. The mixture in the ignition cup is ignited and in turn fires the black-powder primer charge. The primer charge is surrounded by the larger black-powder ignition charge and placed in an outer perforated tube, which amplifies the heat and flame sufficiently to surround the propellent charge.

3C6. Lock combination primer

The same type and size of primer (fig. 3C4) is used in all United States Navy bag guns. A primer is

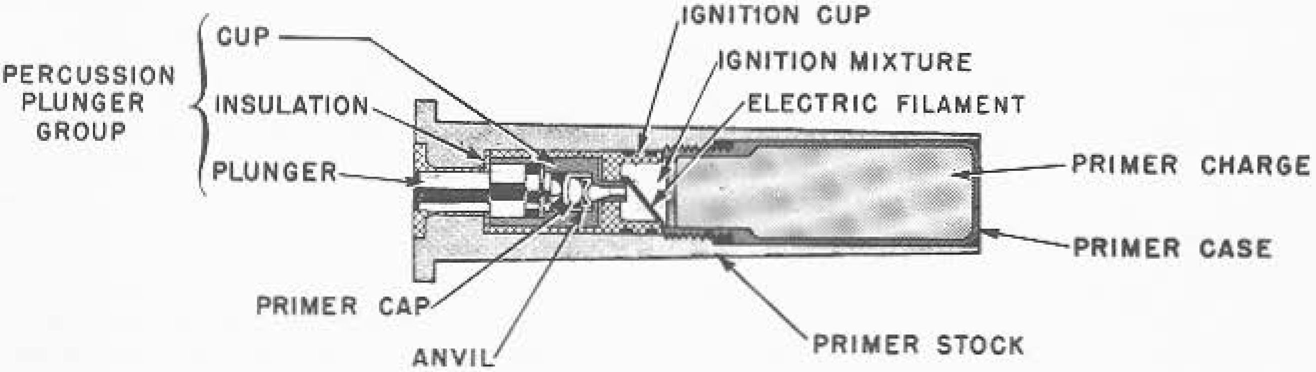

FIGURE 3C4.—Lock combination primer.

placed by hand in the firing lock of the gun each time the gun is loaded. There is no ignition charge in the primer, as one is included in the assembled powder bag. The percussion and electric features of the lock combination primer are the same as those of the case combination primer.

D. Projectiles

3D1. General

The projectile is that part of a round of gun ammunition which is expelled from the gun by the force of the explosion of the propelling charge. Present-day projectiles are elongated cylinders with a pointed front end. The application of the principle of rifling to guns caused the abandonment of the earlier spherical projectile. Rotation of the projectile permitted the use of a longer and heavier projectile, thus obtaining vastly increased range, accuracy, penetrative ability, and sectional density. (See art. 3D5.)

Modern small-arms projectiles often consist of solid metal; projectiles used in larger guns, however, are assemblies of several components. The three essential parts are the metallic *body*, the explosive *bursting charge*, and the *fuze* which sets off that charge. There may also be a *tracer* to make the projectile more readily visible during flight. Fuzes and tracers will be discussed in the next section of this chapter.

3D2. Projectile bodies

The solid bullet damages by impact alone. Assembled projectiles, however, inflict damage primarily by the blast of the high-explosive charge and the resulting high-velocity fragments.

The external shape of the projectile is designed to obtain the desired flight characteristics of stability and minimum air resistance. The form of forward end which best fulfills these conditions is the *ogive*. An ogive (fig. 3D1) is the shape generated by the revolution of an arc of a circle about a chord. In a projectile the chord is the axis of the projectile and the radius used is about nine times the diameter (caliber) of the projectile. (In small-caliber projectiles a cone is sometimes used instead of an ogive.) Abaft the ogive a projectile is cylindrical. The cylindrical shape may continue to the base, in which case the projectile is said to have a *square* base; or the after portion may be slightly tapered or conical, in which case the projectiles are described as *boat-tailed*. The corner of the base in either type is usually turned to a small radius. In fixed ammunition the form of the after end is influenced by the need for providing a bearing surface for the lip of the cartridge case.

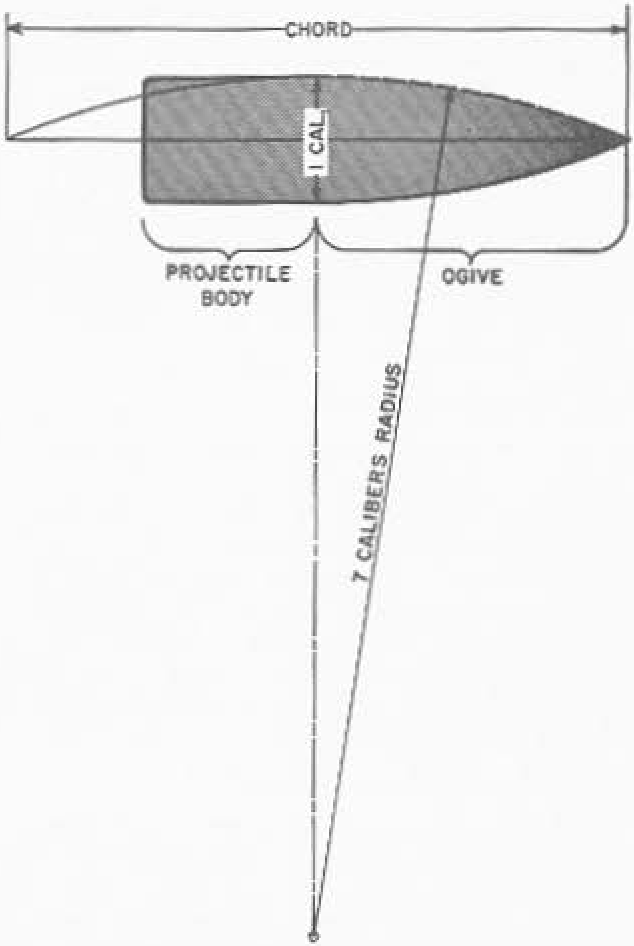

Figure 3D1.—Ogive characteristics.

Between the two ends lies the cylindrical body of the projectile. Near the after end of the cylindrical part of the projectile is the *rotating band;* at the forward end is the *bourrelet*. These two surfaces, slightly raised above the body, provide the support and bearing which steady the projectile in its passage through the gun. They must be some distance apart to prevent excessive wobbling in the bore. Except for the bourrelet, the projectile does not require a fine machined finish; experimental firings have indicated that fine body finish adds very little to projectile accuracy. See figure 3D2.

3D3. The bourrelet

The forward bearing surface of a projectile is machined to a fine finish to reduce friction and minimize the wear of the gun. In small projectiles the entire body forward of the rotating band may be finished to

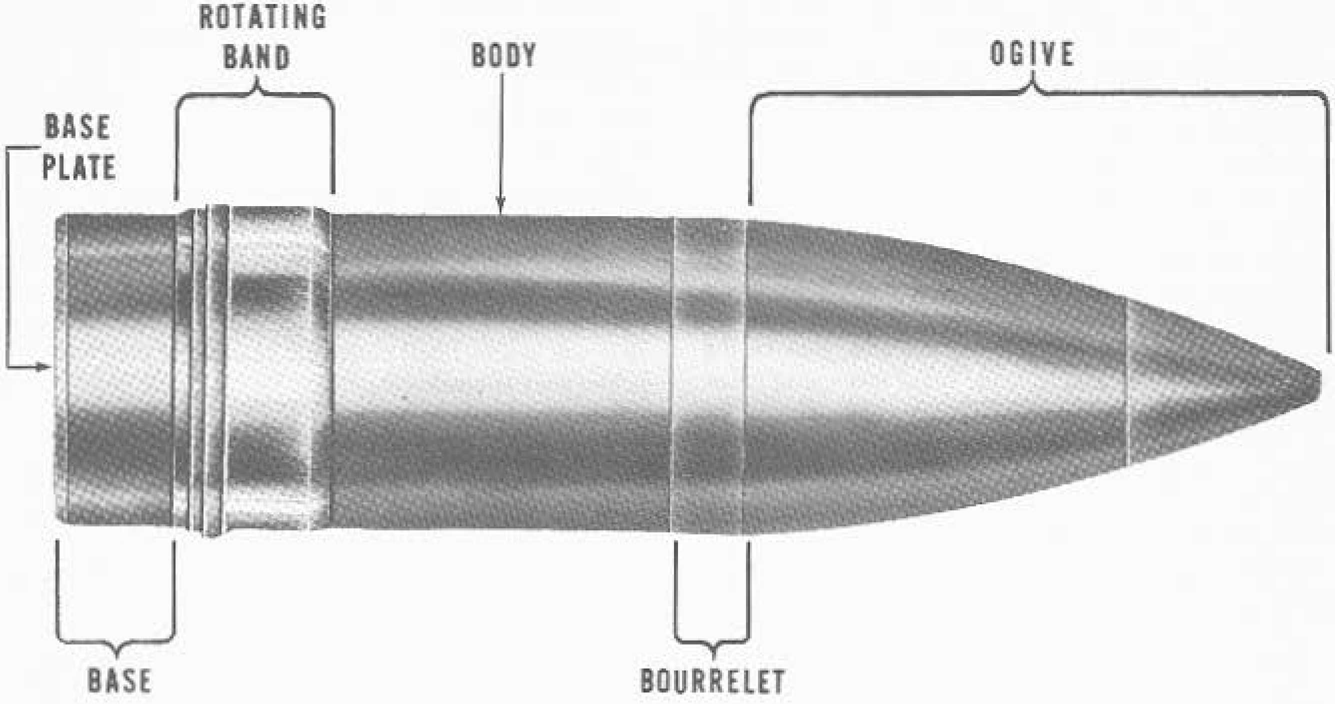

FIGURE 3D2.—Main parts of projectile.

bourrelet diameter. On large-caliber projectiles additional bourrelets, abaft and forward of the rotating band, are added to provide better support, especially during ejection from the muzzle. A certain clearance must be provided between the bourrelet and the lands (the raised portions of the rifling). Standard United States Navy practice requires a specified bourrelet diameter 0.015 to 0.023 inch (in different-caliber projectiles) smaller than the diameter of the bore. To this margin is added a manufacturing tolerance of minus 0.005 to 0.007 inch, so that total clearance limits vary from 0.015 to 0.030 inch. Unnecessary clearance adversely affects accuracy and fuze performance and may mar the rifling by excessive wobble.

3D4. Rotating band

The three primary functions of the rotating band are to seal the bore, to position and center the rear end of the projectile, and to impart rotation to the projectile. Its secondary function is to hold the projectile in its proper position in the gun after loading and ramming, and to ensure that it will not slip back when the gun is elevated. The band has considerable effect on muzzle velocity, range, accuracy, and the life of the gun.

Rotating bands are usually made of fine copper; in major-caliber projectiles a small percentage of nickel is added to provide greater strength. Some projectiles of recent design have been banded with gilding metal (90 percent copper, 10 percent zinc), which increases strength and reduces the amount of copper deposited in the bore of the gun.

To reduce dependency on copper for this use (copper is increasing in military importance while it becomes scarcer and more expensive) rotating bands of sintered iron are under development.

United States Navy projectiles generally have rotating bands about one-third caliber in width. Foreign services sometimes use narrow multiple bands on major-caliber projectiles. The rough band is assembled (after heating it, in 8-inch and larger calibers) by slipping it over the rear of the projectile and pressing it into a score cut into the body of the projectile. This scoring usually includes a dovetail on each edge to assure that the band will not be thrown off by centrifugal force. Either waved ridges, longitudinal nicks, or knurling are provided on the bottom of the score to ensure against band slippage during rotary acceleration.

The forward edge of the band is slightly conical, to facilitate engagement with the origin of rifling. The cone, during loading, wedges into a seat at the origin of the rifling (except in fixed ammunition) and holds the projectile in place during loading and elevating. The central portion of the band is cylindrical and of a slightly greater diameter than that of the bore plus the depth of the rifling. This portion is sometimes divided by circumferential grooves, called *cannelures,* which provide space into which displaced copper may be wiped. In the after part of the band separate-loading projectiles have a raised lip followed by an especially deep cannelure. The lip serves to ensure a good gas check and also to prevent overramming in a badly worn or eroded gun.

The purpose of the cannelures is to minimize the formation of a fringe or skirt from the excess metal which is wiped rearward. Such a fringe is likely to flare outward, at the muzzle of the gun, due to the effects of the gases and of centrifugal force, and cause loss of range and accuracy. Bands on which the lip is well forward of the end of the band and is undercut with a deep cannelure are known as *nonfringing.*

3D5. Weight of projectiles

Within reasonable limits, a gun can fire projectiles of varying weights. Approximate weights of United States Navy projectiles are determined by the formula

$$W=\frac{d^3}{2}$$

in which:

W=weight of projectile in pounds, and
d=caliber of gun in inches.

The weight of the projectile per square inch of bore is called *sectional density.* It is represented by the expression

$$SD=\frac{W}{A}$$

in which:

SD=sectional density.
W=weight of projectile in pounds.
A=area of bore, including grooves, in square inches.

This ratio varies with the size of the gun, averaging approximately six-tenths of the caliber. The concept of sectional density helps the designer to avoid designing a projectile of given diameter and weight either too long or too short for proper stability.

The distribution of weight in a projectile is a matter of considerable importance. The center of gravity should be in the longitudinal axis and close to or abaft the center of form.

3D6. Classification of projectiles

All gun projectiles, other than small arms, share the characteristics thus far described, but since targets differ in character, projectiles must differ in design, the better to defeat them.

The primary classification is into three general types:

1. Penetrating.
2. Fragmenting.
3. Special-purpose.

3D7. Penetrating projectiles

This type includes *armor-piercing* (AP) and *common* (Com). They are designed to penetrate, respectively, heavy and light armor. The usual bursting charge for these types is Explosive D, which is insensitive enough to permit penetration without premature detonation. The characteristics which make that possible will be described under the heading of penetration in the next chapter.

3D8. Fragmenting projectiles

These projectiles are designed to inflict damage both by blast effect and by *fragmentation;* that is, breaking up into small high-velocity fragments. They are characterized by thin walls and large cavities for the explosive filled. The general type is subdivided as follows:

1. *High-capacity* (HC) projectiles (fig. 3D3) are used against unarmored surface targets, shore objectives, or personnel. Since no penetration ability is required, explosives more sensitive than Explosive D may be used.

2. *Antiaircraft* (AA) projectiles are designed for use against airplanes in flight. Except for fuzing they are substantially the same as high-capacity in the

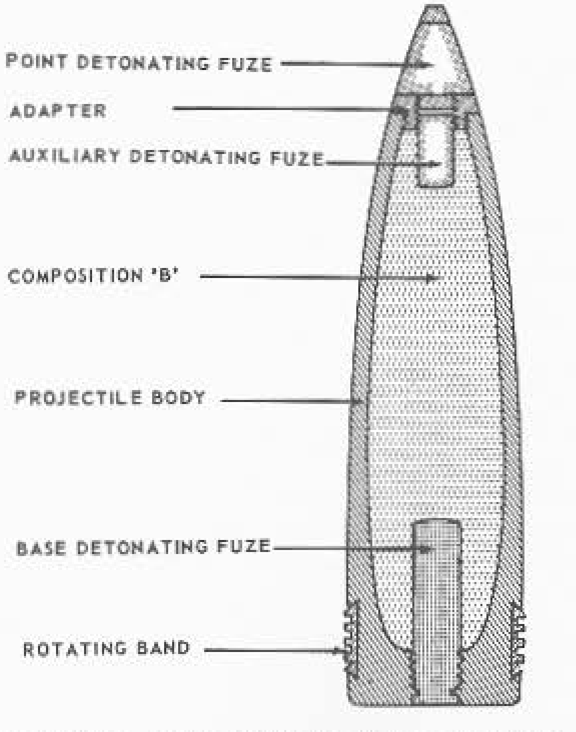

FIGURE 3D3.—6"/47-caliber high-capacity projectile.

larger calibers. In smaller sizes the explosive often contains an incendiary element.

3. *Antiaircraft common* (AAC) projectiles are a dual-purpose design, combining the qualities of antiaircraft projectiles with the toughness necessary to penetrate steel plating not of armor thickness. The type of fuzing will depend on the use. The walls may be heavier than those of the other thin-walled types, and the filler is usually Explosive D.

3D9. Special-purpose projectiles

These are not intended to inflict damage by explosion or by fragmentation. Their construction incorporates no strength other than that required to withstand discharge from the gun without damage to the contents. If the filler includes any explosive, it is a small charge designed to expel the contents of the projectile. See figure 3D4. Some of the common varieties are:

1. *Illuminating* (Illum) projectiles, often called star shells (SS), contain a bright flare attached to a parachute. They are expelled from the projectile body by a small black-powder charge which also lights the flare. As the parachute slowly lowers the flare, it serves to illuminate the target.

2. *Smoke,* or white phosphorus (WP), projectiles contain tubes of that substance which are scattered and burst by a small black-powder charge. White phosphorus produces a screening smoke. It also has some incendiary effect.

3. *Window* (W) projectiles contain metal foil strips, which, when scattered high in the air by the small burster charge, serve to confuse enemy radar operators.

4. *Nonfragmenting* projectiles are used for antiaircraft gun practices. They contain a smoke-producing substance, available in various colors, which makes it possible to observe the bursts without close bursts destroying the target.

5. *Target* or blind-loaded (BL) projectiles contain an inert substance, often sand, designed to give the same weight and balance characteristics as explosive fillers. In large calibers (6-inch and above) target projectiles simulate the AP design but have no filler other than the spotting color.

6. *Proof-shot* projectiles are used for proof tests of guns at the proving ground.

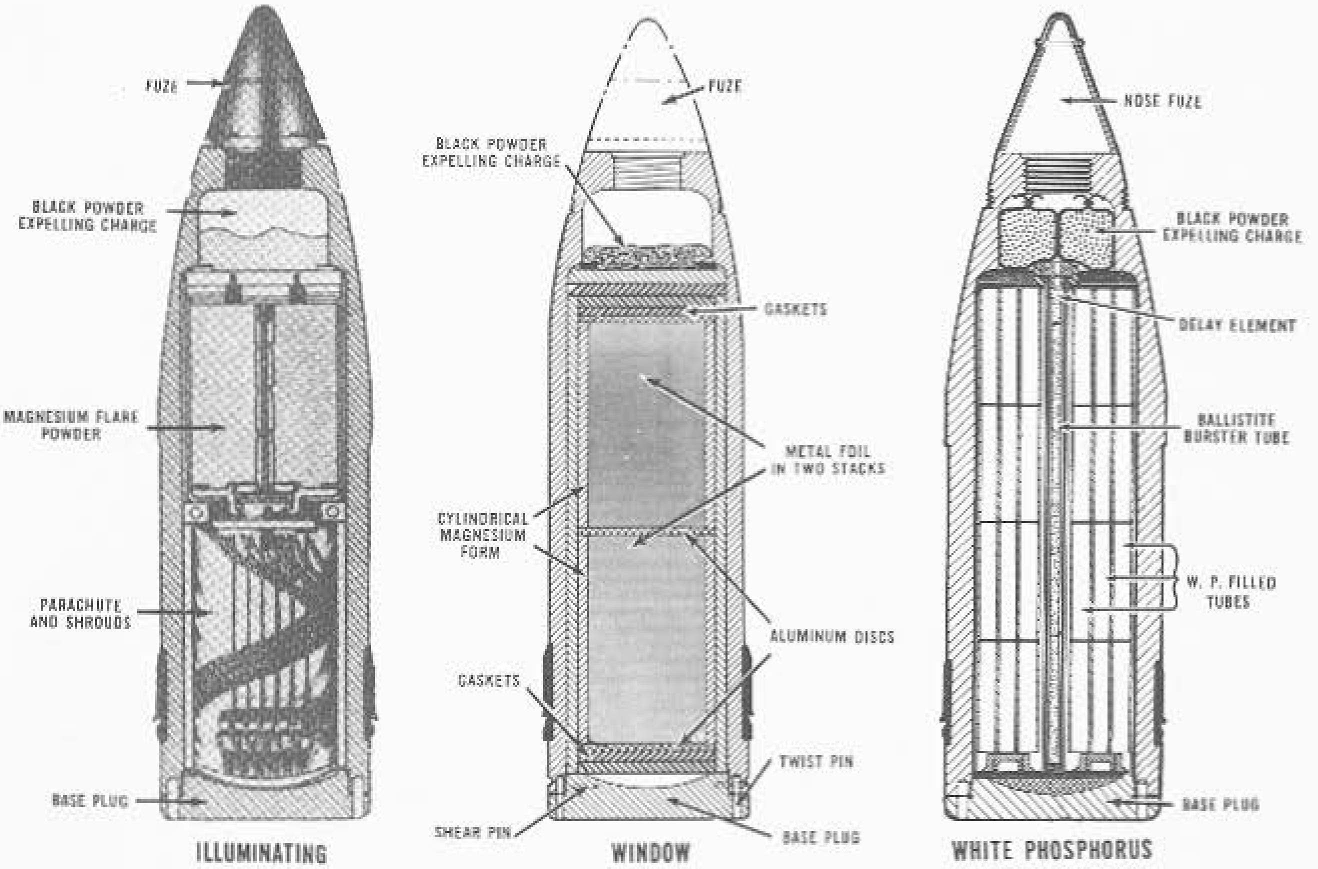

FIGURE 3D4.—Special-purpose projectiles.

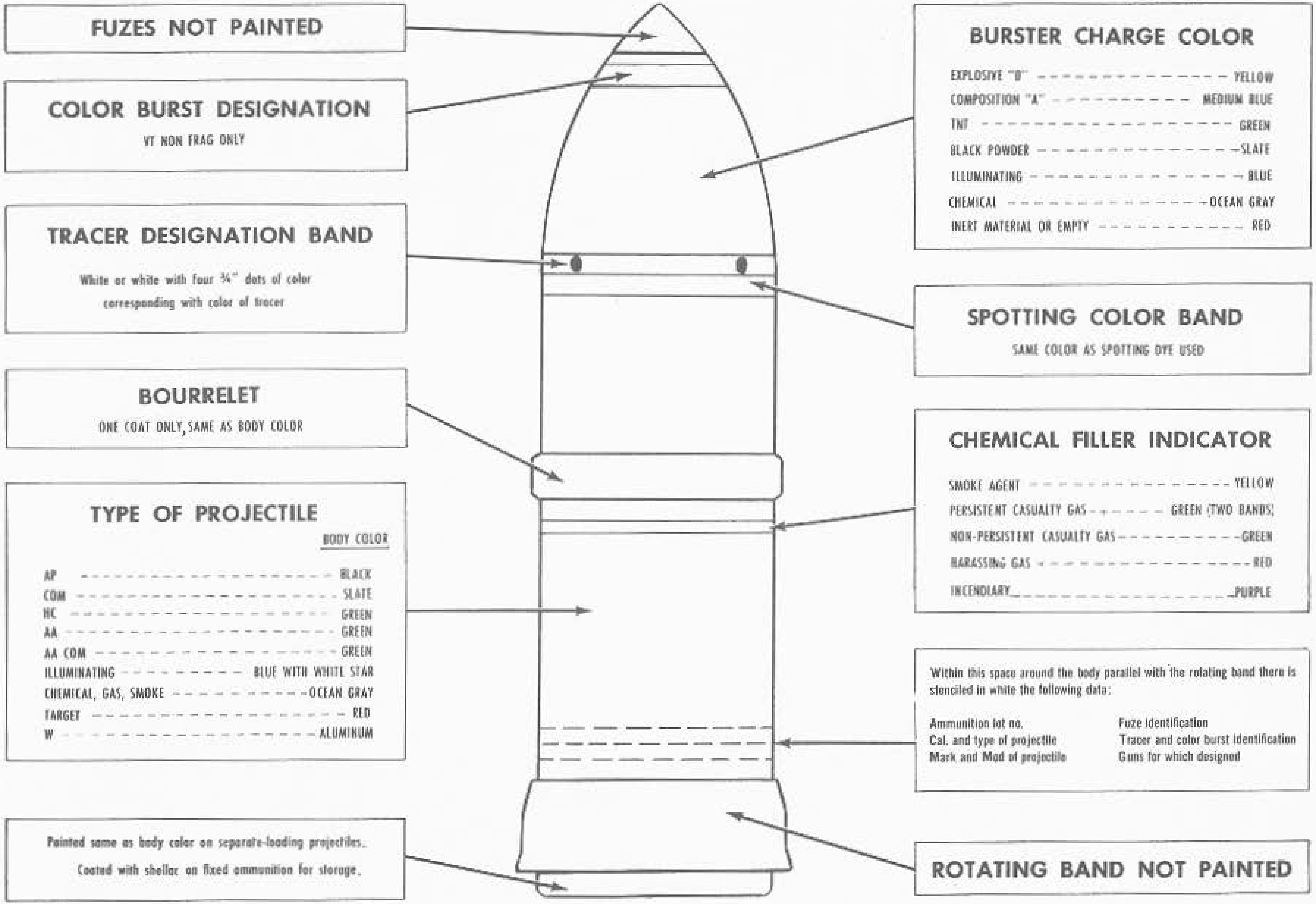

FIGURE 3D5.—Projectile markings.

3D10. Dye loads

Penetrating projectiles designed primarily for use against surface targets usually contain small quantities of dye, so placed in the nose of the projectile as to be dispersed upon water impact. This dye colors the splash produced by the hit and thus allows a ship to identify its own splashes. Standard practice is to issue to each ship in a division its own identifying color. Available colors are red, blue, green, and orange.

3D11. Projectile markings

Projectiles are painted various colors to facilitate rapid identification by gun crews. Nose fuzes and rotating bands are never covered with paint. Bourrelets are covered with one thin coat of paint only, and may never be repainted or retouched. The remainder of the projectile is painted according to the code set forth in figure 3D5, which applies to all calibers larger than 40-mm. Separate special codes are used for painting 20- and 40-mm projectiles.

E. Fuzes and Tracers

3E1. General

A projectile fuze is a mechanical, electrical, electronic, magnetic (or combination) device which will detonate or ignite a charge in a projectile at the time and under the circumstances desired.

Fuzes may be classified according to function (impact, time, or proximity), the position of the fuze in the projectile (nose or base), type of mechanism or principle utilized (mechanical or VT), and specific action at time of functioning or initiation (ignition or detonation). Figure 3E1 illustrates typical fuzes.

Typical examples of nomenclature for Navy fuzes are as follows:

1. Auxiliary detonating (ADF).
2. Base detonating (BDF).
3. Mechanical time (MTF) or electrical time (ETF).
4. Point detonating (PDF).
5. VT or proximity (VTF).

Point detonating, time, and VT fuzes may all be called *nose* fuzes because of their location in the projectile. Fuzes are designated as *detonating* when they contain within themselves a high-explosive charge sufficient to set off a high-order explosion in the burster. *Ignition* fuzes contain black powder sufficient to ignite the burster of small projectiles. In larger projectiles such fuzes function indirectly through an auxiliary detonating fuze.

3E2. Fuze safety

It is necessary for the safety of personnel that a fuze be made inoperative until the projectile is well clear of the muzzle and of the firing ship. A fuze is said to be *armed* when its component parts are so arranged that it can operate to set off the next explosive in the chain. It is *unarmed* when its safety features are so functioning as to prevent its operation.

A satisfactory fuze must meet these requirements:

1. It must be safe to handle; that is, the fuze must not become armed if dropped or joggled.
2. It must be safe within the bore of the gun and for a sufficient distance outside to ensure security of personnel in the vicinity.
3. It must initiate the explosion of the filler at the proper moment, whether on impact or at a specified time.

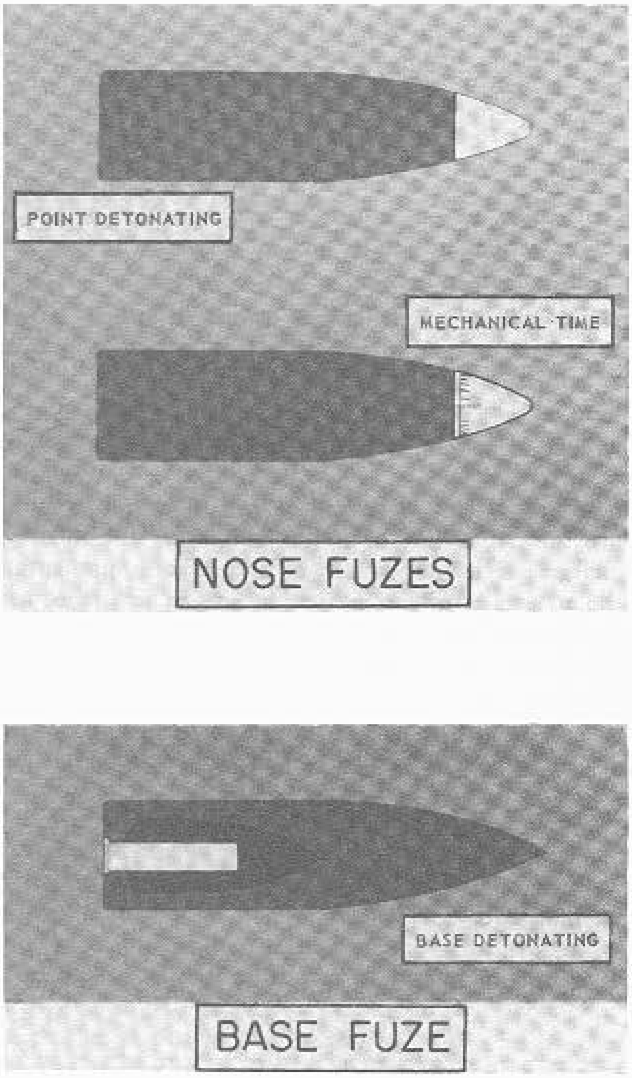

Figure 3E1.—Location of fuzes in projectiles.

3E3. Fuze operation terminology

If fuzes were not equipped with safety features, they would be relatively simple. The need for safety makes for complicated operation, which depends for its initiation on certain forces brought into play when a projectile is fired from a gun. Forces which may be used to operate fuzes are:

1. *Setback.* The force of inertia which tends to move all fuze parts to the rear as the projectile is initially accelerated in the bore of the gun.
2. *Angular setback.* The force of inertia, which tends to resist the initial rotational acceleration of the projectile in the gun.
3. *Centrifugal force.* The continuous force, caused by the rotation of the projectile in flight, which tends to move all fuze parts radially away from the axis of the projectile.
4. *Creep.* The continuing inertial force resulting from the deceleration of the projectile in flight, caused by air resistance, which tends to move forward the fuze parts not exposed to the air.
5. *Impact.* The sudden inertia force which tends to move all fuze parts forward when a projectile strikes.
6. *Target contact.* The rearward movement of a firing plunger or other device when the projectile contacts the target material.

The magnitude of some of the forces is illustrated in the table below.

3E4. Auxiliary detonating fuzes

"Aux dets" are used in conjunction with all types of nose fuzes in HC, AA, and AAC projectiles of 3-inch and greater caliber. They are interposed between the nose fuze and the bursting charge of the projectile to provide a heavier shock for detonating the bursting charge. They also act as a safety feature, preventing the projectile filler from exploding in case the nose fuze should be accidentally actuated prior to the arming of the auxiliary detonating fuze.

3E5. Base detonating fuzes

Base fuzes are used alone in armor-piercing and common projectiles. They are used in combination with nose fuzes in such dual-purpose projectiles as AAC and HC. In the latter case their functioning is completely independent of the nose and auxiliary fuzes, the former of which may for certain purposes be replaced by a *steel nose plug.*

All base detonating fuzes function on impact; some, however, incorporate a delay feature. Base detonating delay fuzes function a short time (0.02 to 0.033 second) after the projectile hits the target, thus allowing time for armor penetration. Base detonating nondelay fuzes contain no actual delay element, but a slight inherent mechanical delay provides a time margin sufficient for the penetration of thin sheet metal.

3E6. Time fuzes

In most calibers of gun projectiles, time fuzes are clockwork mechanisms used to obtain timed air bursts. They are used in AA, AAC, AA (non-frag), HC, Illum, WP, and W projectiles of 3- to 6-inch sizes and in HC projectiles of 8- to 16-inch caliber. There are two general types of mechanical time fuzes: one type depends for its action solely upon centrifugal force; the other is a spring-driven variety. The centrifugal type is less affected by long periods of storage, but the spring-driven fuzes are more satisfactory for use on large projectiles which have slower speeds of rotation. Each type is made in several marks and mods for various calibers.

A highly accurate electric time fuze that can be set very quickly (and thus reduces "dead time" to the vanishing point) is under development at this writing.

3E7. Point detonating fuzes

Point detonating fuzes are designed to function on impact with the target. They have the advantage of being faster acting on impact than base detonating fuzes. One group of such fuzes is used in place of

FORCES AFFECTING FUZE OPERATION

Projectile	*Muzzle velocity fs*	*Max. bore pressure in new guns*	*Maximum setback force**	*Spin at muzzle rps*	*Maximum retardation** (creep force)**
20-mm	2, 725	24 long tons/in^2	96, 566g	1, 154	
5"/38 AAC	2, 600	18 long tons/in^2	14, 344g	208	7. 2g
16"/50 AP	2, 500	18 long tons/in^2	3, 003g	75	1. 1g

*g Equals the pull or force of gravity.
**Maximum occurs a short distance from the muzzle.

mechanical time fuzes in connection with shore bombardment with HC, AAC, and WP projectiles. Other marks of point detonating fuzes are used in 20- and 40-mm projectiles, for which no other type fuzes are provided (20- and 40-mm AP projectiles are solid metal, except for the tracer cavity, and thus unfuzed).

Figure 3E2 shows a sectional view of the 40-mm Point Detonating Fuze Mark 27. This is a simple fuze, an explanation of which will illustrate typical fuze operation and safety features. The fuze is composed of four major parts: the fuze body, the magazine, the firing-pin holder, and the rotor block assemblies. The forward section of the fuze body contains the plastic firing-pin extension or hammer, the stab-type firing pin, detents and springs contained in the firing-pin holder assembly, and the rotor block with rotor, detents, springs, and rotor cover. The magazine is screwed into the after end of the body. The fuze is designed:

1. To detonate the projectile explosive charge and thereby burst the projectile with high-order detonation instantaneously upon impact.
2. To ensure safety and prevent detonation of the projectile when fired in a gun or in normal flight until detonated by impact.

Operation. On examining figure 3E2 the student will see that the firing pin cannot move aft (to the left in the diagram) because the firing-pin detents prevent it from doing so. Also, the detonator is not in line with the firing pin, so that, if the firing pin should somehow move aft, it would strike the rotor body and not the detonator. If the detonator should explode, it would not detonate the booster. The rotor, and consequently the detonator, is held in the unarmed position by the rotor detents, which fit into the rotor body as shown in the diagram. The rotor body also contains two lead counterweights.

When the projectile is fired, the rifling in the gun rotates the projectile. As the projectile spins, centrifugal force causes the firing-pin detents to move outward, freeing the firing pin. The rotor detents also move outward, freeing the rotor. Centrifugal force also acts upon the lead counterweights in the rotor body, tending to move them outward. This causes the rotor body to rotate, bringing the detonator into line with the firing pin and lead-in. The fuze is now armed.

Upon impact, the firing pin is rammed aft, striking and exploding the detonator. The detonator explodes the booster, which in turn detonates the burster charge of the projectile.

3E8. VT fuzes

The radio proximity or VT fuze is used in all of the types of projectiles which can use mechanical time fuzes except illuminating and window (which are not supposed to be exploded in the immediate vicinity of a target). The VT fuze is a self-contained, radio-controlled fuze capable of transmitting pulses of radio energy, and of receiving a portion of these pulses which may be reflected by a target. The fuze fires when the returning signal is of sufficient strength, due to proximity to the target, to trigger the firing circuit. Essentially, the fuze is an extremely rugged radio transmitting and receiving station, which fits into the nose of a projectile and is so compact that it displaces a volume less than half of an ordinary pint milk bottle. See figure 3E3.

The principle of its operation can best be illustrated by describing the firing of a typical VT-fuzed projectile. Not only are VT fuzes as rugged as most fuzes, but they have been provided with reliable safety features. As a result, in safety of handling, safety in the bore of the gun, and freedom from muzzle bursts, they are as safe as any fuzes used by the Navy.

At the instant the projectile is fired, a tiny wet battery that furnishes energy to the fuze begins to be activated. The shock of fire breaks a small glass vial filled with liquid electrolyte. Centrifugal force in the rotating projectile causes this liquid electrolyte to flow toward the outside of a cylindrical cell through a stack of thin ring-shaped plates that have been carefully insulated from each other. Contact between the electrolyte and the plates makes the battery electrically active. Within a half second after the battery has become active, it has charged a firing condenser with electricity. Once this condenser is charged and a mercury safety switch has been opened, the projectile is "armed", and ready to detonate when a target influences it to do so. All this has been accomplished by the time the projectile has traveled four or five hundred yards.

As the projectile speeds through the air at a rate of approximately 2,600 feet per second, a radio oscillator sends out electromagnetic waves or impulses at the speed of light. These impulses will be reflected back to the oscillator by any target that gives a radio reflection, such as metal objects, water, or earth.

At first the projectile is so far from the target that these impulses are not returned in any strength. But as the projectile approaches closer to the target the oscillator receives ever stronger reflected impulses. These incoming impulses interact with outgoing impulses to create a "ripple pulse" which is amplified by vacuum tubes. If the projectile comes within a radius of about 75 to 100 feet of its target, this "ripple pulse" becomes powerful enough to trigger a thyratron tube which acts as an electronic switch. This releases the electrical energy stored in the charged condenser which, in turn operates an electrical primer. The

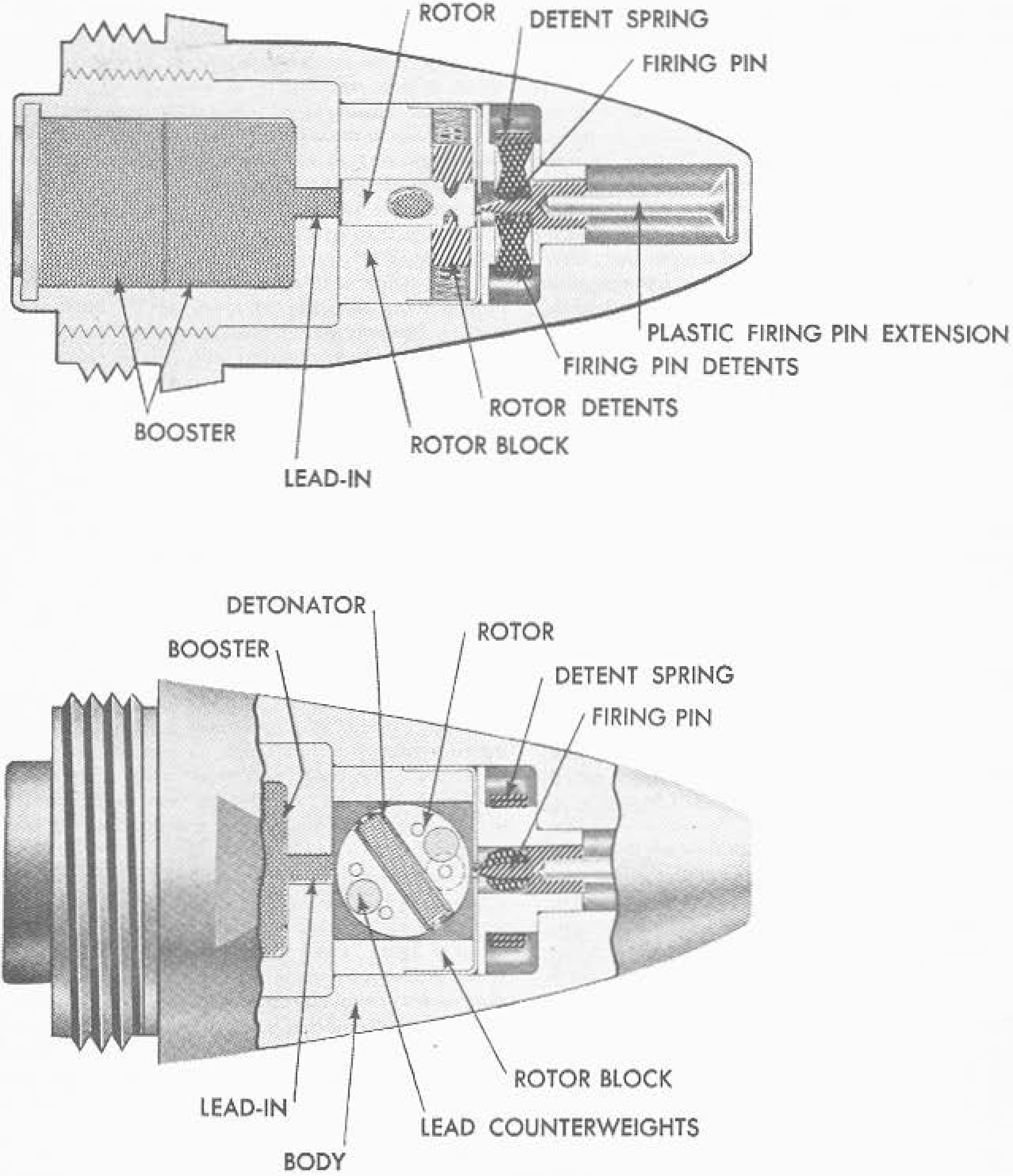

FIGURE 3E2.—Two views of point detonating fuze—unarmed.

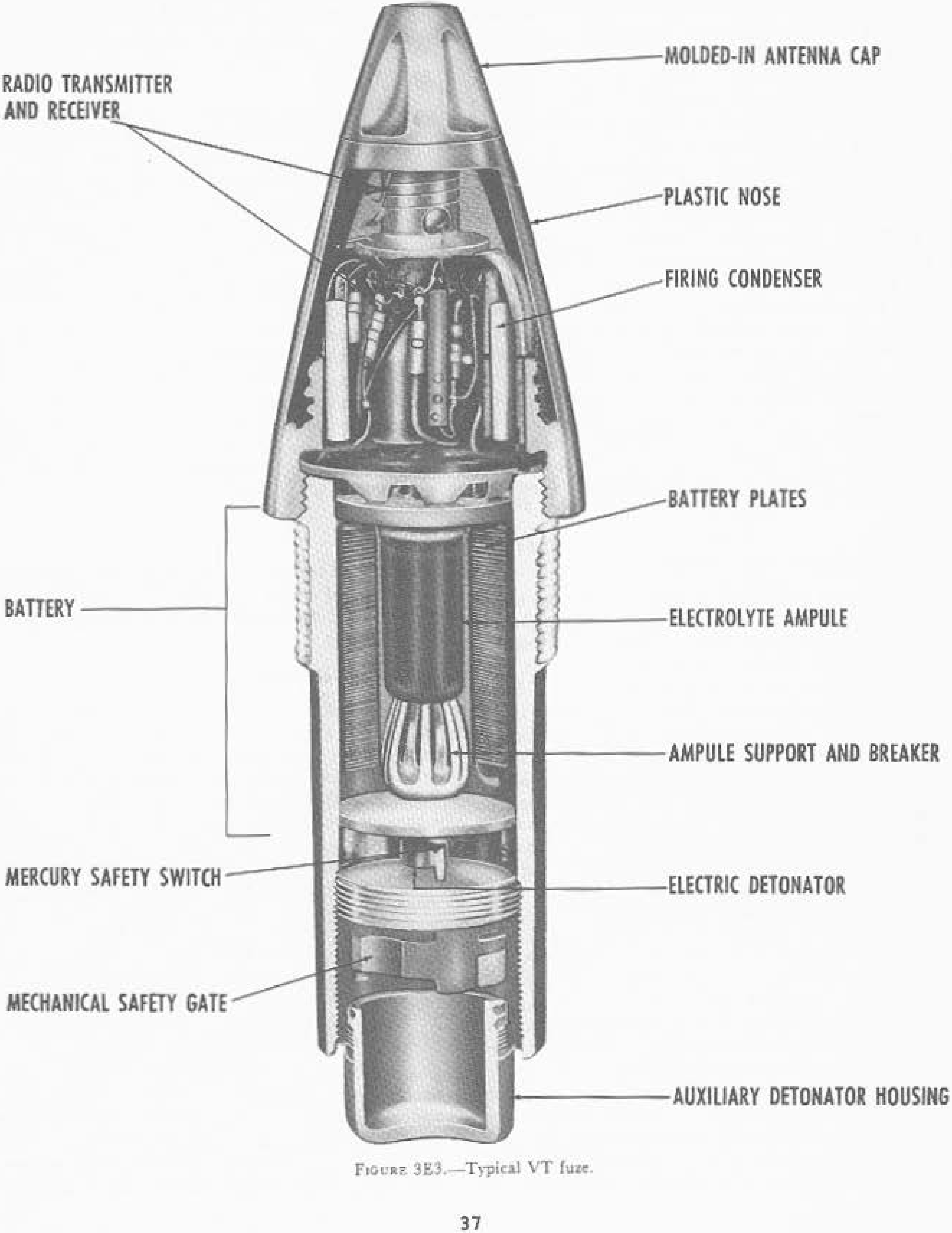

Figure 3E3.—Typical VT fuze.

primer consists of a small container of black powder which is fired by an electrical current passed through a resistance wire. The blast from this primer operates an auxiliary detonating fuze, which sets off the main explosive charge in the projectile.

This fuze, the result of Navy research, has been regarded as one of the greatest forward steps in recent ordnance development. It eliminates completely the tremendous problem of fuze setting in order to time the burst at a point in the trajectory where lethal damage results to a fast-moving target. This allows maximum concentration on accurate tracking and solution for the correct trajectory, which is necessary because the projectile must be placed within 100 feet of the target for the fuze to function.

VT-fuzed ammunition is very effective on exposed personnel and lightly armored targets ashore. It is also well adapted for harassing and interdiction fire to deny the enemy the use of, but not destroy, bridges and other works which our own forces may later require. No matter what the topographic configuration, the fuze will detonate at that designed point in its flight in close proximity to a reflecting mass, such as the earth or trees, where fragmentation blankets a maximum effective area. The introduction of this fuze in the European campaign of World War II by United States Army artillery had a tremendously demoralizing as well as destructive effect on enemy ground troops.

3E9. Tracers

It is sometimes advantageous to follow a projectile in flight. For this purpose a tracer body is installed in the base or as an extension to the base, of the projectile. It contains a pyrotechnic mixture designed to burn with a definite color during all or a specific part of the projectile's flight. Standard tracer colors in the Navy are red or white in AA projectiles and orange (for night tracers) in AP and common projectiles. The tracer is ignited by the heat or pressure of the propelling charge.

In 40-mm projectiles, tracers perform the special function of setting off the burster charge at the end of the tracer burning period. This is accomplished simply by allowing the inside end of the tracer to have direct access to the main charge. The advantage of a *self-destructive* feature in AA projectiles, which might otherwise land and burst on own ships or installations, is obvious.

F. Bombs

3F1. Bombs and bomb components

The aerial bomb provides for very efficient use of the load-carrying ability of a given plane. Only a small fraction of the weight involved must be reserved for suspension, release, and sighting equipment. On the other hand, an aerial bomb has very low initial velocity, this velocity being that of the airplane carrying the bomb at the time of release. Time of flight is relatively prolonged, and accurate computation is required to obtain hits. A partial exception exists, of course, in glide bombs with homing mechanisms. The first aerial bombs were the small, hand-thrown missiles of World War I, but 2-ton bombs are now commonplace, and even larger sizes have been standardized.

A conventional aerial bomb has three major components. The *body* contains the explosive charge, or it may have a chemical filler. The *fin assembly* is provided to keep the bomb stable in flight. A *fuze* serves to detonate the charge. These three elements usually are assembled into a complete round just before the bomb is loaded in or on the aircraft. A glide bomb, which is a guided missile, must in addition carry the equipment necessary for guidance.

Trends in bombing developments include the perfection of a great variety of special-purpose bombs, including some relatively small types and others of great weight; development of improved methods of tracking, sighting, and computing; development of sighting and control systems that are effective at high altitudes and under all conditions of visibility or lack thereof; and evolution of more effective methods of detonation.

3F2. Bomb classification

In terms of their fillers there are three general types of bombs: *explosive* bombs, *chemical* bombs, and *inert* bombs. Varieties of explosive bombs include armor-piercing, semi-armor-piercing, general-purpose, light-case, depth, fragmentation, and antiaircraft types. Chemical bombs include gas, smoke, and incendiary varieties. Inert bombs contain no explosives or chemicals, and are used in drills and in practice bombing. A number of aerial bombs are shown in figure 3F1. All bombs are painted with appropriate identifying markings.

In addition to the three major types, various encased pyrotechnic materials (not strictly bombs) are usually regarded as bomb ammunition.

3F3. Explosive bomb types

Armor-piercing bombs (fig. 3F2) are thick walled, contain about 15 percent by weight of explosive filler, and are intended for use against heavily armored ships and heavy steel or concrete structures. They incorporate only tail fuzes. The effect of a near miss with such a bomb is small, because of the small per-

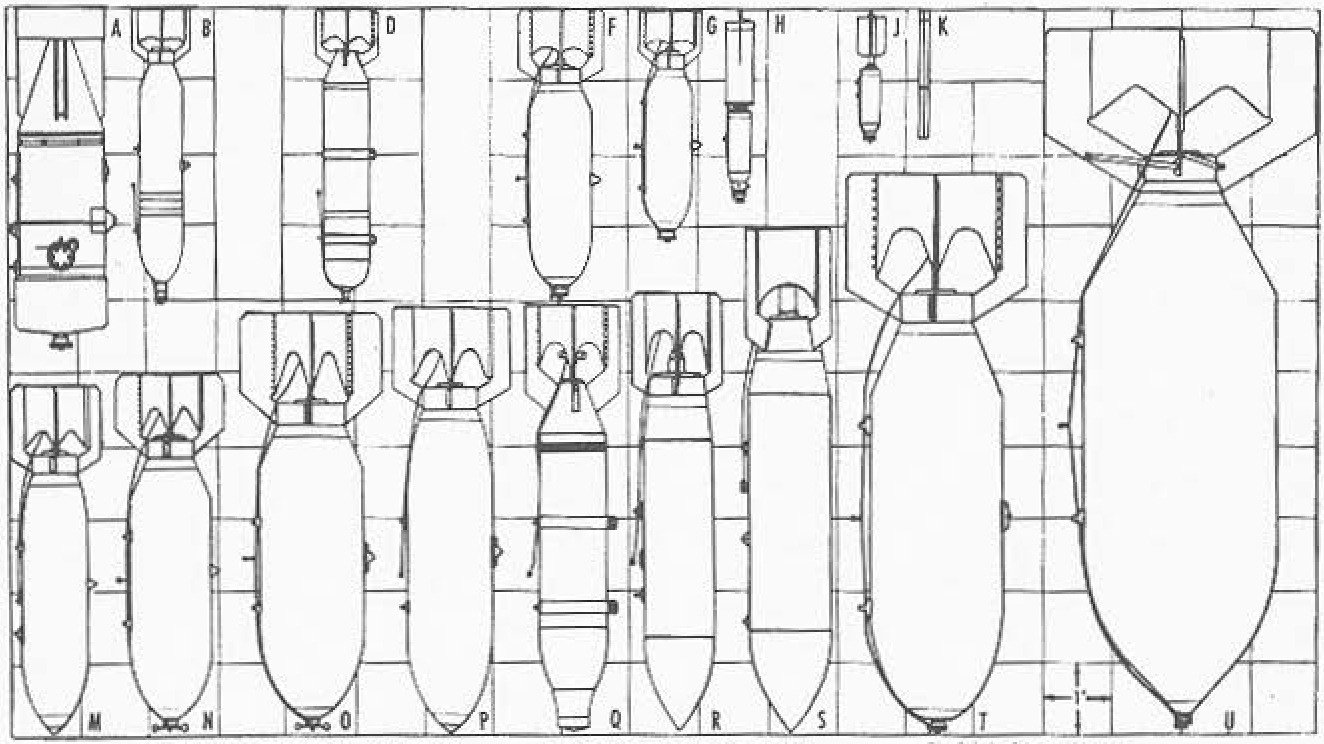

A. DEPTH BOMB, 325-lb., FLAT NOSE
B. GAS BOMB, 115-lb.
D. CHEMICAL BOMB, 100-lb.
F. G.P. BOMB, 250-lb.
G. G.P. BOMB, 100-lb.
H. FRAGMENTATION BOMB, 23-lb.
J. FRAGMENTATION BOMB, 20-lb. (for cluster)
K. INCENDIARY BOMB, 4-lb.
M. S.A.P. BOMB, 500-lb.
N. G.P. BOMB, 500-lb.
O. G.P. BOMB, 1000-lb.
P. S.A.P. BOMB, 1000-lb.
Q. A.P. BOMB, 1000-lb.
R. A.P. BOMB, 1000-lb.
S. A.P. BOMB, 1600-lb.
T. G.P. BOMB, 2000-lb.
U. LIGHT CASE BOMB, 4000-lb.

FIGURE 3F1.—Types of aerial bombs.

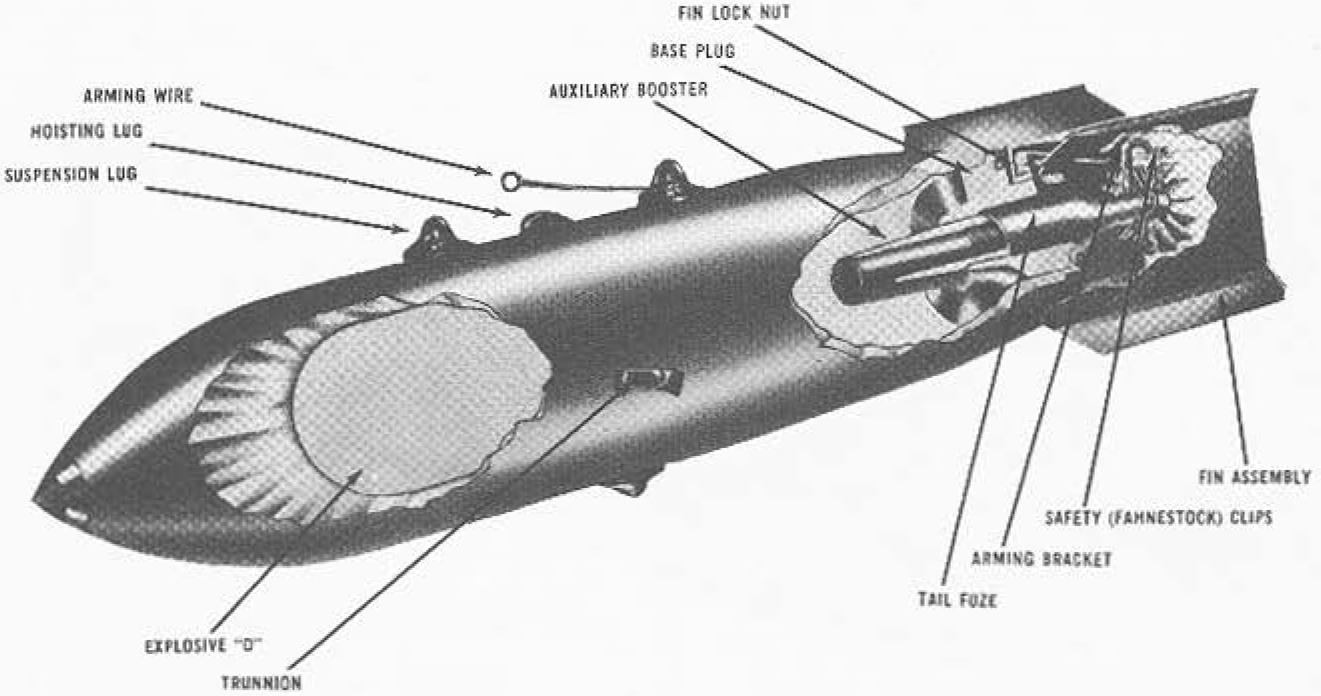

FIGURE 3F2.—An armor-piercing bomb assembled for loading.

centage of explosive contained. If used against unarmored or lightly armored ships, they are likely to pass clear through the target before detonating.

General-purpose bombs (fig. 3F3) have medium-thick cases, contain about 50 percent by weight of explosive filler, and are used to produce blast, fragmentation, or mining effects. Appropriate targets include unarmored vessels, submarines, and land targets such as ordinary buildings, aircraft (on ground), gun emplacements, and personnel.

Light-case bombs carry a maximum explosive charge: about 75.6 percent by weight. The fuzes used function instantaneously; this is necessary, because cases rupture upon impact. Various weights have been developed, ranging from 400 to 12,000 pounds. The effect of such bombs depends largely upon blast, and to a lesser degree upon fragmentation; they are effective against light structures and personnel.

Depth bombs, intended primarily for attacks upon submarines, contain about 70 percent by weight of explosive filler, and have relatively light cases. As shown in figure 3F1, a depth bomb has a flat nose to reduce the possibility of ricochets when it is dropped into the water at small entrance angles. For attacks upon submarines, this bomb is fitted with a hydrostatic tail fuze, but an impact nose fuze may also be installed if the target is a surface ship. If a nose fuze is present, it must be unarmed in making antisubmarine attacks. Depth bombs have little penetrating power, and depend primarily upon blast to produce desired effects.

Fragmentation bombs have heavy cases made up of steel rings or steel bars, and contain about 14 percent by weight of explosive charge. When such a bomb bursts, fragments from the shattered case are thrown outward at high velocity and may do considerable damage to light installations, aircraft on the ground, unarmored vehicles, and personnel.

3F4. Fire and incendiary bombs

Fire and incendiary bombs are types of chemical bombs. Large fire bombs may be droppable fuel tanks filled with a highly flammable mixture, which is usually 94 percent of 80 or 100 octane gasoline and 6 percent napalm. Napalm thickeners gel the gasoline to a rubbery mass of such a consistency that when used in the fire bomb the resulting conflagration covers a large area, burns intensely, and lasts a long time.

As an antipersonnel weapon, the fire bomb has been found to be effective against personnel in slit trenches, dugouts, and foxholes. As an incendiary, the fire bomb has been found to be effective against wooden piers, houses, docks and waterfront warehouses, wooden surface vessels, ammunition dumps, truck convoys, and any other readily burnable target.

The average coverage from one bomb dropped on level terrain is about 300 feet long and 100 wide, when dropped from aircraft in level flight at altitudes of 100 feet and speeds of 300 knots. Higher altitudes and lower speeds decrease the coverage and *vice versa*.

Other incendiary bombs usually contain thermite in magnesium alloy cases. As the thermite burns, the magnesium case becomes ignited and adds to the incendiary effect.

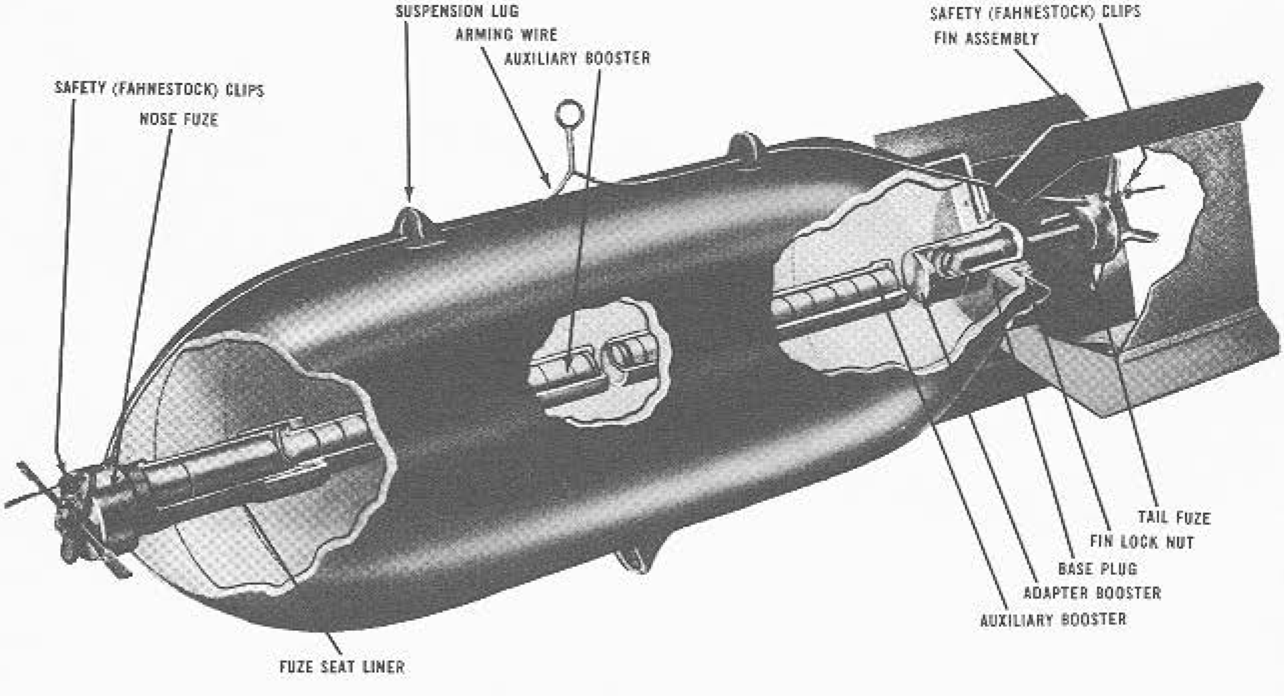

FIGURE 3F3.—A general-purpose bomb assembled for loading.

Chapter 4

ARMOR AND PENETRATION

A. Types of Armor

4A1. Early ship armor

The idea of sheathing ships with projectile-resisting metal undoubtedly existed before any attempt was made to put it into practice. It is reported that a Korean admiral used ironclads in the late 16th century. The first European proposal to do so was made by Sir William Congreve in England in 1805, but the first ironmaster to make the attempt was John Stevens of Hoboken, N. J., some 7 years later.

Stevens' efforts did not meet with immediate success, but it does not appear that his approach to the subject was unscientific, for he had experimented until he knew the exact thickness of iron plate which would withstand the fire of any given gun. About 30 years after Stevens began the work, his son, Robert L. Stevens, felt that the work was far enough along to report the result to Congress. Yet another 12 years elapsed before Congress authorized the building of an armored floating battery. Meanwhile the French and the British laid the keels for a number of armored ships. In the bombardment of the Kinburn forts during the Crimean War, three French armored craft first demonstrated their usefulness.

The widespread interest in armored ships was probably due to the fact that the rifling of the barrels of long-range guns was also occupying the attention of naval designers. The spin-stabilized bullet had been used in small arms for some time, and it was felt that a similarly designed long-range gun was feasible. Such a gun was developed, and by the last quarter of the 19th century, smooth-bore ordnance had disappeared from use in the navies of the civilized world.

4A2. Iron armor

Although other metals were considered, only iron, wrought or cast, seemed feasible as a protective covering; and of these, wrought iron showed itself to be superior. The first practical armor consisted of 4- or 5-inch wrought-iron plate, backed by 36 inches of solid wooden timber.

The iron industry of the time, however, was not equal to the production of the necessary heavy forgings. Therefore, even though early experiments had established solid plate as better than a built-up covering of laminated armor, naval designers were obliged to use plate built from thin layers, often inadequately bonded together. The armor of the Civil War ironclads was of this type.

The problem before the armorers of the day was quite clear: to produce a very hard face plus a very tough back. However, methods of providing sound cementation between a hard faceplate and a thicker, heavier foundation were still to be discovered.

4A3. Steel armor

Before any process for the production of such bonded armor was developed, the Bessemer converter, followed a few years later by the Siemans-Martin open-hearth process, changed the course of development. The French, in 1876, produced a 22-inch mild steel plate (which is said to have been hammered to that dimension from a thickness of 7 feet) that resisted the fire of all guns then in use. It was the best armor produced up to that time, but its tendency to crack led to a return to research in built-up armor.

4A4. Compound armor

The next advance resulted from the development of two rival processes. The first was the Wilson-Cammel compound plate which consisted of an open-hearth steel face cast on top of a hot wrought-iron back plate. The second was the Ellis-Brown process of cementing a steel face to an iron back by pouring molten Bessemer steel between them. In both cases, the plates were rolled after compounding.

Actually, only a small advance had been made. All the efforts of the steel men and Naval designers had amounted to a mere 25 percent advantage: 10 inches of compound armor was only about the equal of 12½ inches of iron. It was some progress, but not much.

4A5. Nickel-steel armor

French engineers again took the next step forward when, in 1889, Schneider introduced about 4 percent of nickel into his steel plate, which increased its strength and toughness. His plate was hammer-forged, annealed, tempered, oil-quenched, and then reannealed. This new process added another 5 percent of resistance to the 25 percent already gained by the makers of compound plate. This type of plate was used by the United States to protect the old battleships *Texas, Maine,* and *Oregon.*

4A6. Harvey armor (carburized nickel steel)

The next important development was American and, oddly enough, also originated in New Jersey, not far from the Stevens plant where protective plating for naval craft had had its beginning about 80 years before. In 1890, H. A. Harvey, of Newark, invented a process which added about 15 percent more strength to the plate described above. The new method consisted of *carburizing* the face of a plate of nickel steel by holding it at about the temperature of molten cast iron for 2 or 3 weeks with the face in contact with bone charcoal. This increased the carbon content of the outer inch of the face from about one-fifth of 1 percent to slightly more than 1 percent. The entire plate was then quenched, first in oil and then in water, and the result was both a hardening of the face and a toughening of the back. Later, the water dipping was replaced by cooling with a dense, high-pressure water spray.

It was soon found that this type of plate could be reforged at a low temperature after carburizing, reducing its thickness by from 10 to 15 percent without loss of strength. The resultant plate had the strength of iron armor half again as thick as itself.

4A7. Krupp armor (carburized nickel chrome alloy steel)

The hardening effect of adding chromium to nickel steel had been discovered before the above development was completed, but the resultant alloy was too difficult for the industry to handle until the Germans discovered suitable methods. Krupp at that time used illuminating gas as a carburizing agent instead of bone charcoal, but the industry at a later date returned to the use of a solid carbonaceous material for this purpose.

4A8. Krupp armor (decrementally hardened)

The important *decremental hardening* process was introduced by Krupp shortly after the development of carburizing. The Krupp armor was processed by burying the plate, all but the face to be hardened, in clay, and exposing the face to a high, quick heat. This heat traveled from the face of the plate toward the back in an evenly descending plane, and when the critical heat for hardening had penetrated to from 30 to 40 percent of the thickness, the plate was removed to a spray pit and chilled by water played at first on the face alone and, a few moments later, on both sides of the plate together. This decremental face-hardening, as it was called, is still the general process by which modern protective armor is produced, though further refinement of the method constantly goes forward. This process may be applied to carburized or noncarburized armor as a final treatment.

4A9. Class A armor

The carburized face-hardened plating described in the foregoing article is known as Class A armor. Its use is protection of the *vertical* surfaces around the more vital parts of heavily armored ships—the sides, the turrets, the barbettes, etc. The impact of a projectile against such surfaces would necessarily be at a very small angle of obliquity [1] and as such would have

---

[1] The angle of obliquity is measured between the axis of the projectile and the normal to the plate at the point of impact.

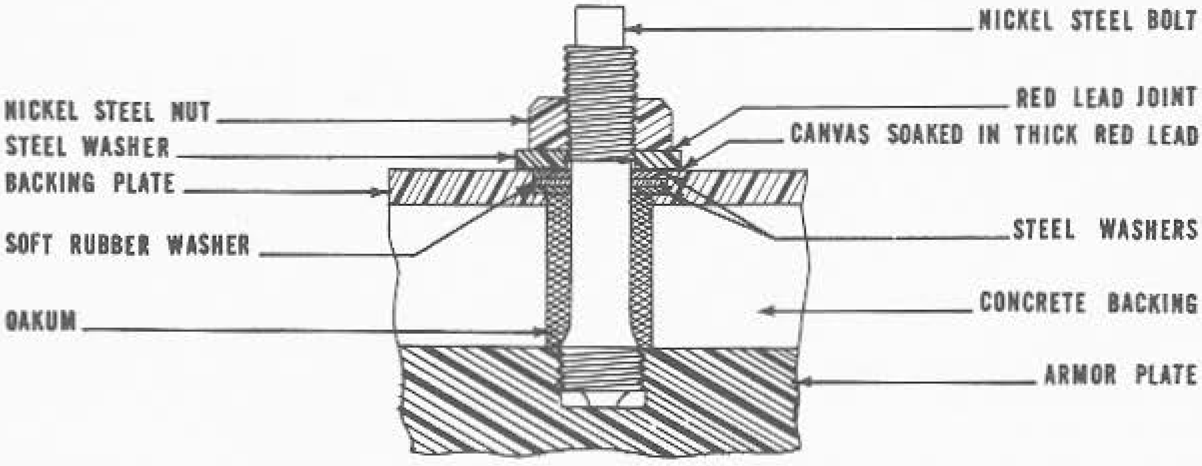

FIGURE 4A1.—Watertight armor bolt, showing interlocking use of resistant and yielding materials.

to be withstood by a very hard face to resist the initial impact, plus great backing strength to absorb the shock. Class A armor must defeat a projectile by stopping it, by breaking it up, or by rupturing the explosive cavity (thus reducing its effectiveness even though it penetrates the plate). Such armor must be of considerable weight, and naval design admits of the use of only a limited quantity of it. Enclosing the hull of a ship with heavy armor not only does not add to the strength of the craft, but actually diminishes it, for the great mass, affixed to the framing members and other strong points, complicates the stresses. For that matter, all armor represents dead weight, and naval designers must balance the requirements of essential protection against dead weight.

Class A armor can be machined only with difficulty, and cannot be fitted snugly against the skin of a ship. The accepted method is to suspend it from the strong points of the hull by means of extended watertight bolts (fig. 4A1) which allow about 2 inches clearance between the armor and the hull, and then to fill the space with concrete. Abutting edges are keyed together, and plates which meet at an angle are rabbeted (fig. 4A2).

The chemical analysis of a typical modern plate is about as follows:

Carbon	0.33%
Nickel	3.33%
Chromium	2.00%
Manganese	0.30%
Silicon	0.07%
Phosphorous	0.016%
Sulphur	0.02%
Iron	93.93%

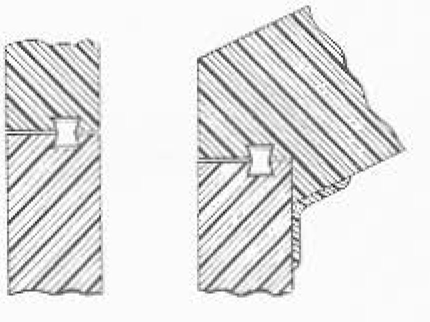

Figure 4A2.—Method of keying adjacent plates of Class A armor. Butt joint is shown at left—angle joint at right.

4A10. Class B armor

Armor designed for the protection of *horizontal* surfaces, and otherwise, where the anticipated angle of obliquity is great, is physically quite different, although chemically about the same. Here, instead of boldly meeting force with resistance, advantage can be taken of the tendency of a projectile to *ricochet*. This glancing rebound is best achieved when the impact of the projectile is met with a plate that gives slightly, thus spreading the force over a wider area. Moreover, the curvature of the depression induced by the impact tends to pick up the curvature of the ogive, further inducing the projectile to rebound harmlessly away by increasing the angle of obliquity immediately *after* the instant of contact. (See fig. 4A3.) Homogeneous armor can be used in this application.

Homogeneous armor is not face-hardened. In thicknesses 3 inches and less, it is called "STS" (Special Treatment Steel). In thicknesses greater than 3 inches, it is termed class B armor. It can be inte-

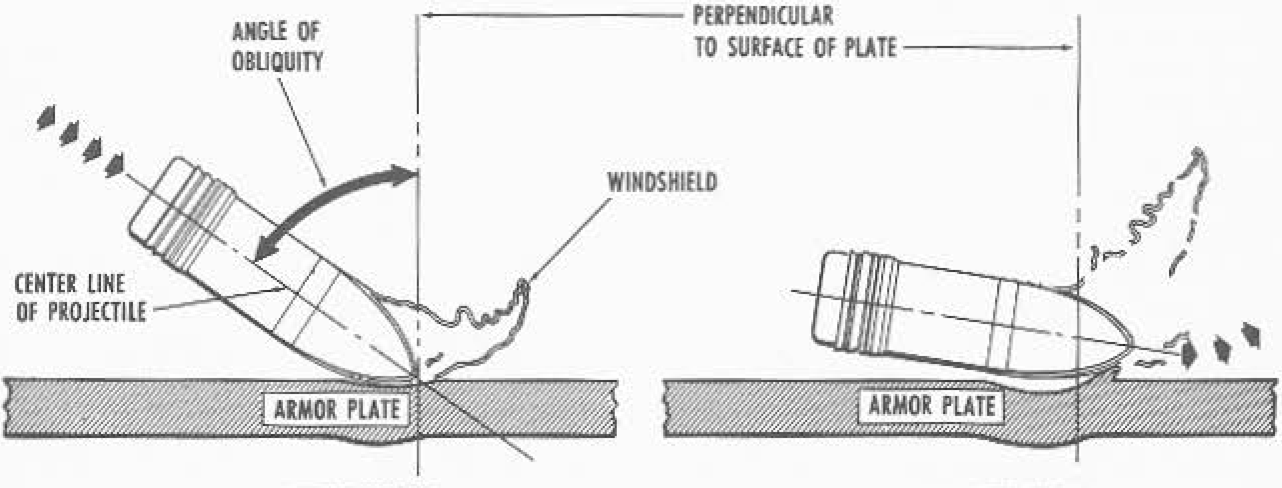

1. AT MOMENT OF IMPACT

2. IMMEDIATELY AFTER IMPACT

Figure 4A3.—Diagram showing left, angle of obliquity at instant of contact with Class B armor, and right, augmentation of same immediately afterward.

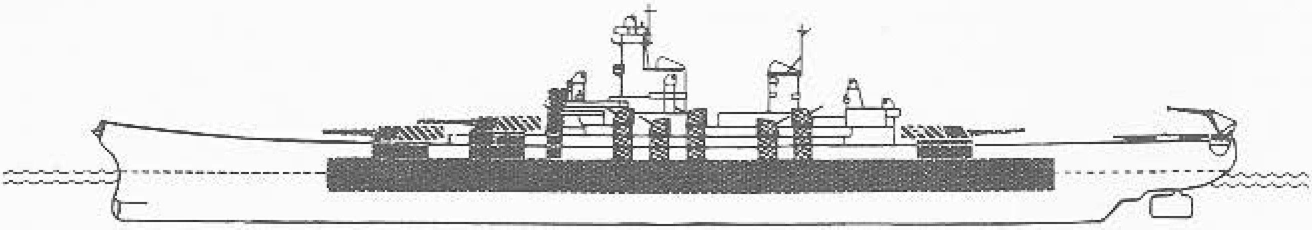

FIGURE 4A4.—Arrangement of Class A armor on a battleship.

grated with the structure of the ship, but it complicates the problem of weight, since it is heavy and lies high in the ship's structure, thereby shifting materially what would otherwise be the ship's normal center of gravity.

4A11. Miscellaneous armor

Two minor classes of armor are *cast* and *light*. In the present state of its development, cast armor is not very satisfactory. It is used at points where plate-armor would be difficult to fit, such as turret range-finder end windows and sight hoods; attempts have been made to use it for boiler uptake grating plates. It has a future, because of the facility and speed with which castings can be manufactured, but metallurgical advances must take place before extensive use can be made of it.

Light armor is a rough designation for any armor less than 2 inches thick. It is for the most part constructed like heavier armor, though some is compounded armor consisting of a hard face fused to a tough back. Its prospective usefulness as a protection for aircraft personnel and engines makes this one of the most important fields of ballistic research. Weight, however, is again a limiting factor.

Nonferrous armor (of aluminum alloy) can be used to protect against fragments. And plastic armor may be used for personnel.

B. Penetration

4B1. Introduction

The same advances in metallurgy which contributed to the development of armor plate have proved to be equally useful in the manufacture of guns and of projectiles, particularly those designed to penetrate armor. The increased toughness effected by alloying steel with chromium and nickel, as well as improved methods for producing and forging large ingots, have resulted in better guns and in a race for supremacy between the designers of protective armor and the designers of projectiles to defeat the armor.

Armor plate is carburized to extreme surface hardness, whereas guns and projectiles, which must combine toughness with elasticity and heat resistance, are not. Steel used in the manufacture of guns usually contains molybdenum, an alloying element which imparts strength at high temperatures.

4B2. Projectile steel

Steel used in projectiles designed to penetrate armor is of the same general formula as Class A armor but with a higher carbon content. After rough forging, the projectiles are annealed, then rough-finished and again heat-treated. Decremental hardening is achieved by dipping the noses in melted lead and cooling them with water, this process being repeated twice. The result is a very hard nose and a tough, ductible body, this last characteristic being necessary to keep the projectile from being broken up by the violent transverse stress caused by crashing through armor plate at an angle.

4B3. Armor-piercing projectiles

This term is used to designate the projectile designed to be used against armor plate of about one-caliber thickness. It must penetrate this plate with its bursting-charge cavity intact so that, when detonated by its delay fuze, it may produce high-velocity fragments within the ship.

For stabilization in flight, the center of gravity of a projectile must be just abaft the midpoint of its axis; but to effect proper penetration, an armor-piercing projectile should have the great mass of its weight immediately behind its blunt nose. Figure 4B1 shows how these two conflicting characteristics are reconciled by fitting a light, tapered *false ogive* or *wind-shield* over the heavy front end.

Within the false ogive, soldered and peened to the nose of the projectile proper, is an armor-piercing *cap*. Made of the same steel as the projectile, the cap is hardened, but by a single immersion in molten lead. This cap serves several purposes: it is so shaped that it increases the *biting angle;* that is, the angle at which the projectile will penetrate instead of ricocheting; it spreads the shock of impact over the periphery of the nose instead of allowing the initial contact to batter

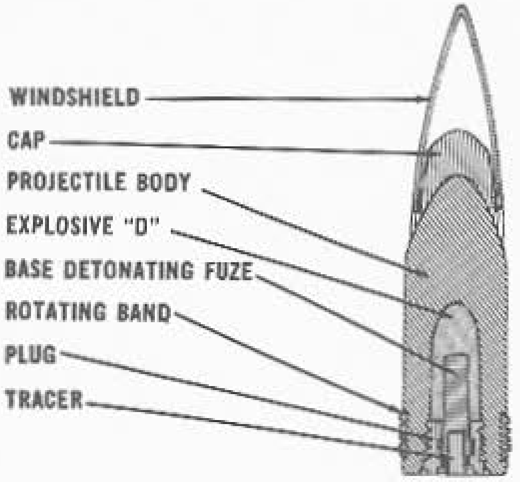

Figure 4B1.—Armor-piercing projectile.

the nose tip; and it prestresses the armor plate upon impact before the cap shatters away and allows the projectile to penetrate the weakened plate.

Projectiles of this type are not efficient against lightly armored ships, because of the relatively small bursting charge that they are able to carry. Because of the delay feature incorporated in their fuzes, they have been known to pass entirely through unarmored craft without bursting.

4B4. Common projectiles

The common projectile is for use against lightly armored ships, being designed to pierce plate of ⅓- to ½-caliber thickness. It resembles the armor-piercing projectile except that it has thinner walls and can, therefore, carry a larger bursting charge. It has, instead of an armor-piercing cap, a *hood,* which provides a means of attaching the windshield without weakening the projectile body by cutting threads. The hood, like the cap, is soldered and peened to the projectile nose. See figure 4B2.

4B5. Ballistic tests

Tests of both armor plate and projectiles consist of firing the latter against the former at measured striking velocities and at specified angles of obliquity. The projectile to be tested must be tried against armor plate of known resistance; or, if the armor plate is to be tested, the characteristics of the projectile must be known. The *penetration* test in each case is a measure of the striking velocity at which the element being tested will defeat the standard element. In testing, armor plate must withstand a maximum velocity; projectiles must penetrate at a minimum velocity.

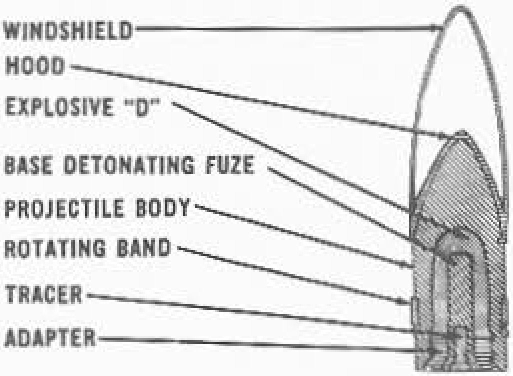

Figure 4B2.—Common projectile.

Certain terms must be defined to provide a basic picture of test procedure:

Ballistic limit or *limit velocity* is the striking velocity which will permit the projectile to pass completely through the plate and emerge from the back with zero residual velocity. Ballistic limit measures the true penetration resistance of the plate.

Residual velocity is the velocity of the center of gravity of the projectile at the instant the projectile emerges completely from the back of the plate.

Complete penetration is obtained when the projectile passes through the plate and emerges. *Incomplete penetration* describes any result less than complete penetration, and *partial penetration* describes the case of a projectile that breaks up, only a part of it passing through the plate.

The ballistic limit of a plate may be determined by any 1 of or a combination of the 3 following methods:

The *bracket* method consists of firing at varying velocities until an incomplete and a complete penetration are obtained within the desired small velocity difference or bracket. The ballistic limit is taken as the mean of the two velocities forming the bracket.

The *residual velocity measurement* method consists of firing one round at a velocity a little *above* the estimated ballistic limit and measuring the residual velocity, the ballistic limit being then computed by reference to established relationships between the residual velocity and the limit velocity.

The *penetration* method works in the opposite direction. A single round is fired at a velocity *below* the estimated ballistic limit and the depth of penetration measured, from which data the true ballistic limit is computed.

Armor plate is also subjected to shock tests, which measure the resistance of the plate to shattering or breaking up from the shock of projectile impact.

Chapter 5

ELEMENTS OF GUNS AND MOUNTS

A. Introduction

5A1. Development of guns

As the Foreword to this course indicates, guns have been used in warfare ashore and afloat for several hundred years. The Foreword indicates, in broad outline, how its effectiveness as a weapon has increased over this period of development. But this development has not been a slow, steady growth. For the first 400 years the technology of gunnery changed so little that, as the Foreword points out, one of Drake's men would have had to learn very little that was new to have served a gun at Trafalgar. Nearly all the basic features that have made the modern naval gun the effective weapon it is today have been developed within the past 130 years, and most of them began to become important only after the turn of the century.

Modern guns and mounts, with their associated sighting and fire control equipment, represent a highly developed technical level of achievement, not the less impressive because most of their features were initiated from 1 to 4 generations ago. Yet the guns and mounts aboard modern United States naval vessels, complex though they are in detail, are based on these relatively few fundamental features. Once they are grasped, the student will find it easier to master the details of structure and functioning of any gun mount or turret he encounters.

5A2. Scope of this chapter

This chapter is devoted principally to those significant features of modern naval guns that have been responsible for making of them the effective weapons they are today. Each of them is discussed individually in somewhat simplified form, with enough detail regarding its application to facilitate the student's understanding of operating principles when he encounters them in actual guns and mounts aboard ship. These features include:

1. Improved metallurgy and barrel construction.
2. Rifling.
3. Breech-loading mechanisms.
4. Percussion and electrical firing systems.
5. Recoil and counterrecoil systems.
6. Power rammers and mechanical ammunition feed.
7. Power-driven ammunition hoists.
8. Safety features—salvo latch, safety link, gas ejection.
9. Sighting and fire control equipment.
10. Power drives for elevating and training.

The next section of this chapter will take up first the common or *conventional* structural features of naval guns and mounts, then will discuss individually the characteristic structural and functional elements of modern naval gun mounts, as listed above.

The final section of this chapter presents, in summary form, fundamental definitions relating to guns and mounts.

B. Features of Modern Naval Guns and Mounts

5B1. Common structural features of naval gun mounts

Figure 5B1 is a closeup phantom view of a 5″/54 mount Mark 39. Though this particular mark is not the commonest of 5-inch mounts, it is a good example of the conventional type of mount that shows the features with which this chapter is particularly concerned. It differs structurally from most other 5-inch mounts principally in having a longer barrel. There are other differences in power drives and hoist arrangements with which we are not concerned at the moment.

Besides showing (as a phantom) the shield which protects the mount, figure 5B1 shows also a number of the major mount components which are essential

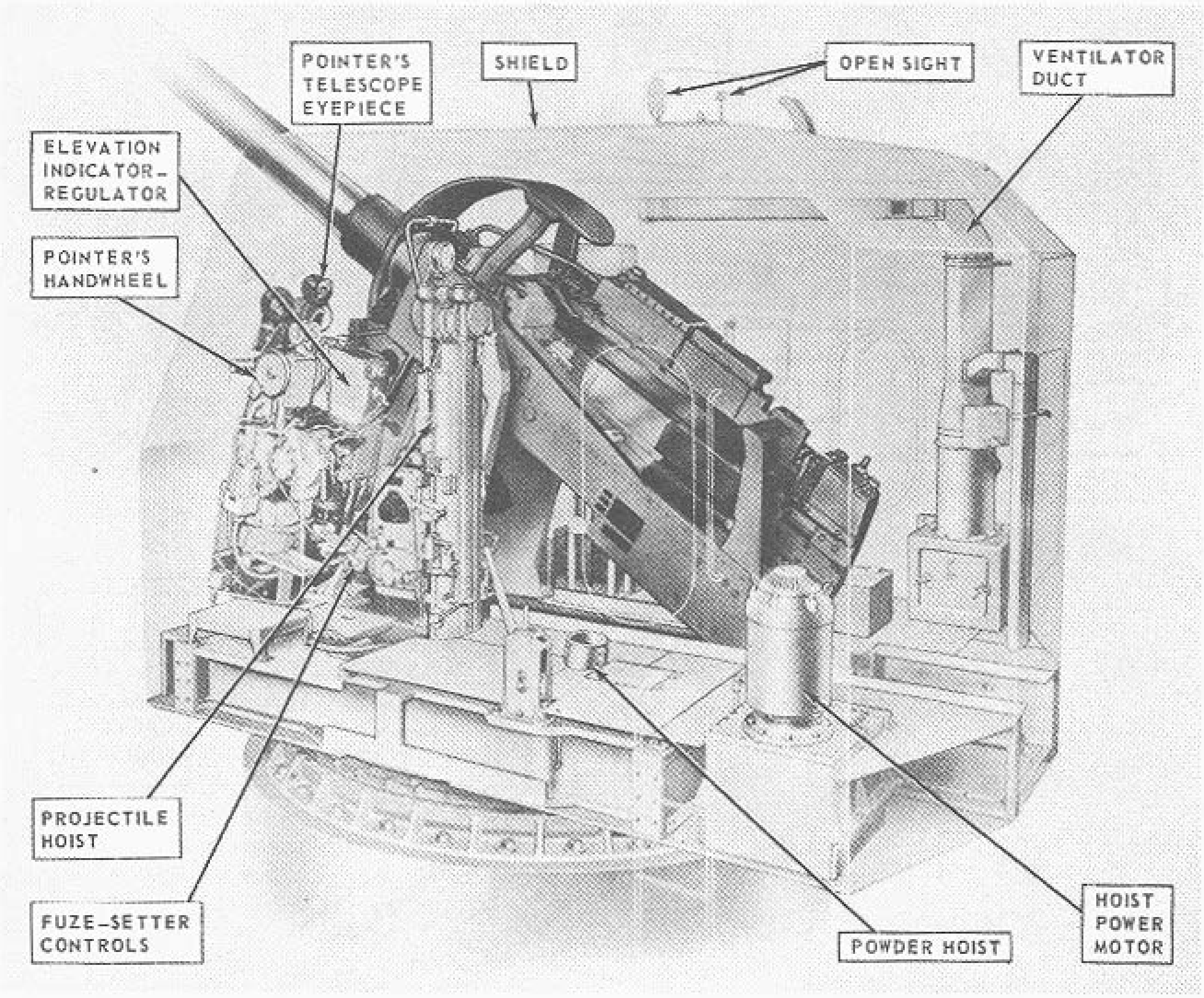

FIGURE 5B1.—Enclosed 5"/54 single mount. (Phantom view.)

to its proper functioning but are structurally accessories rather than basic parts. Such units pointed out in figure 5B1 include parts of the elevation controls and power drive (on the left side of this mount), the pointer's sight telescope, the mount captain's open sight (in the shield overhead), a ventilator duct (also in the shield), and parts of the hoists and fuze setter. On the other (right) side of the mount are the trainer's controls and power drive.

In figure 5B2 these accessory units are stripped away to reveal what might be considered the "skeleton" of the gun mount.

Serving as the mount foundation is the *stand,* a steel ring bolted to the deck. The *training circle* is an internal gear inside the stand.

Supported by the stand, and capable of rotating in train in roller bearings on it, is the *base ring.* It may also be called the *deep section ring* or *lower carriage.* Mounted on it is the *upper carriage,* which is a pair of massive brackets braced to hold the *trunnion bearings.* The trunnion bearings are large roller bearings into which the gun trunnions fit. The trunnions are part of the *slide,* a rectangular weldment which supports all the elevating parts of the gun. The *housing* slides in recoil in the slide; the *barrel* fits into the housing's forward end, and the *breechblock* can slide up and down in a breechway just behind the barrel. Arrows show the movement of which each part named (except the breechblock) is capable.

Now consider these parts in further detail. Figure 5B3 shows how the lower carriage or base ring fits into the stand, and how the mount can move in train. Angle brackets called *holding-down clips* bolted to the base ring fit under the stand so that the carriage will not tip off the stand when the gun is fired or when the ship pitches and rolls. The base ring can turn

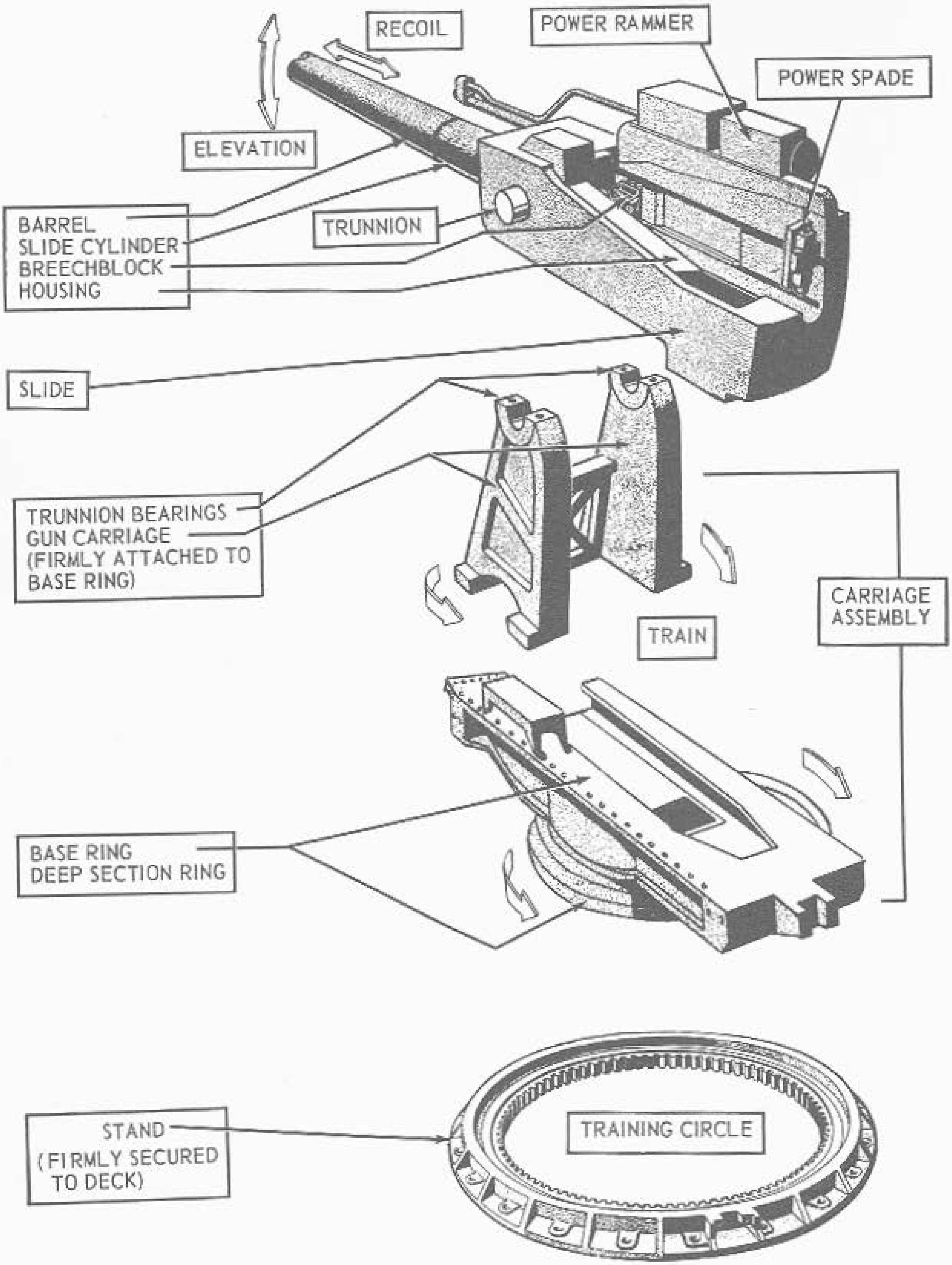

FIGURE 5B2.—Main assemblies of a 5-inch mount. (Exploded view.)

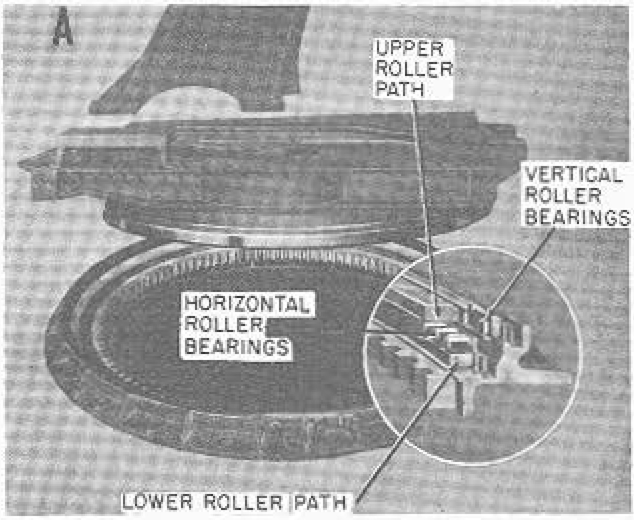

Figure 5B3.—Details of the stand and carriage. A. Roller bearings.

on the stand in two large-diameter roller bearings. One takes up vertical thrust; the other, horizontal. The function of the training circle is illustrated in figure 5B3; a pinion in the carriage engages the internal gear of the training circle to train the mount.

The carriage assembly is generally considered as two pieces—the lower carriage (base ring) and upper carriage—though on 20-mm mounts the distinction is unimportant. Figure 5B4 highlights these elements. The base ring supports the upper carriage, and the platform or working surface; the shield (in enclosed mounts) is secured to it. It also supports the mount power drives and other components. In mounts equipped with hoists, the hoists are suspended from the base ring and train with the mount. The upper carriage, which in 5-inch mounts may be called the *carriage cheeks* and in turrets is called the *deck lug*, is principally the support for the trunnion bearings (figure 5B4). The trunnion bearings and trunnions, in addition to serving as a support which permits the elevating parts to move in elevation, also provide a connection point for air lines (for gas ejection) and mechanical linkages (for mechanical firing linkages and for transmission of elevation movement to firing stop mechanisms).

The trunnions are a part of the slide (fig. 5B5), which is conventionally a rectangular steel weldment which houses or supports all the parts of the gun and mount that move in elevation. In modern mounts designed to engage either air or surface targets the limits of elevation movement are from minus 10 to 15 degrees (that is, with gun barrel depressed 10 to 15 degrees below the horizontal) to about plus 85 degrees (that is, with the gun barrel within 5 degrees of pointing straight up, at right angles to the deck). Because of the limitations imposed by turret structure, elevating mechanism, and ammunition feed equipment, turret guns of older design are not capable of these extremes of elevation.

Figure 5B5 points up the slide and the elements of elevating gear. The slide contains the ammunition feed mechanism (or the power rammer where ammunition feed is performed manually with mechanical assistance), the recoil brake, the counterrecoil mechanism, the elevating arc, and the gun housing. The function of the elevating arc in positioning the slide in elevation is shown in figure 5B5. The arc is a gear sector secured to the slide. It engages a pinion in the carriage. The pinion may be driven manually or by an elevation power drive.

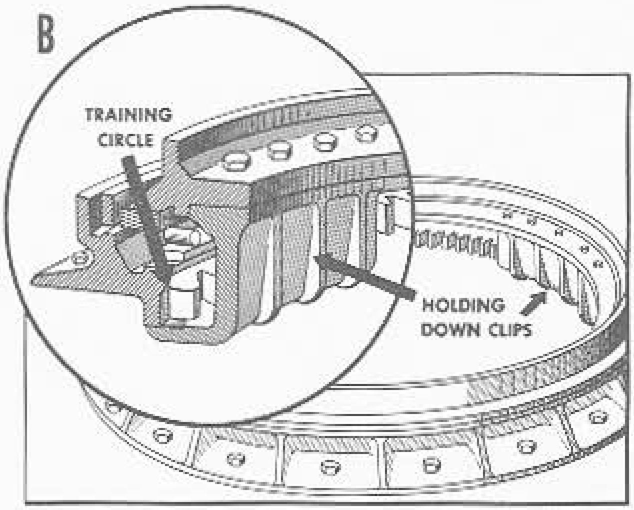

Figure 5B3.—B. Training circle and holding-down clips.

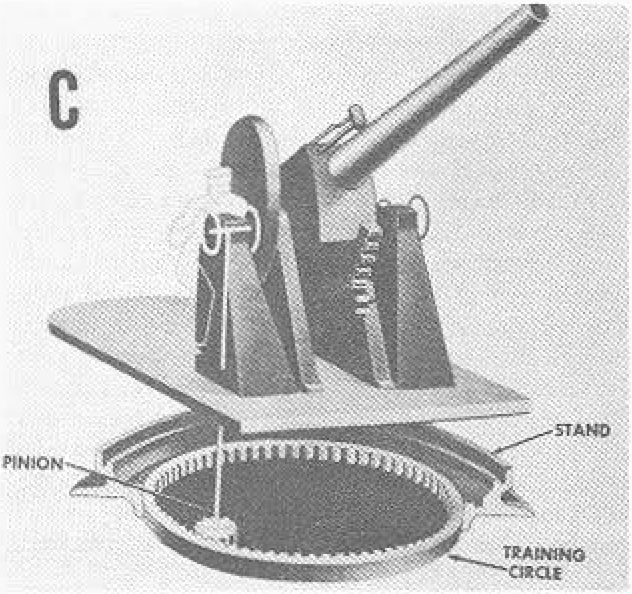

Figure 5B3.—C. Principle of training gear.

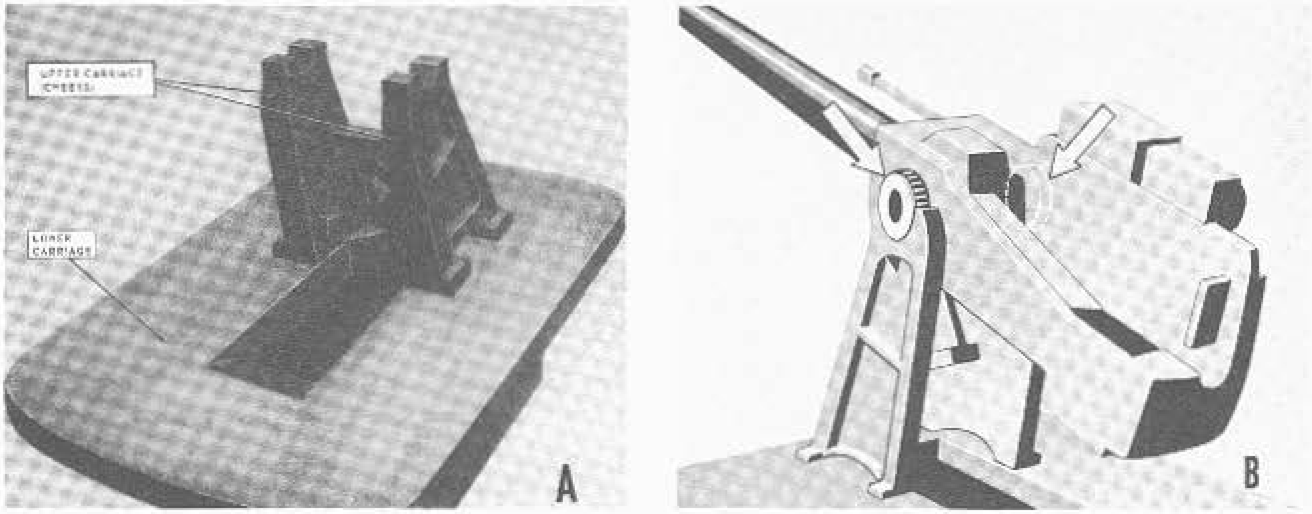

FIGURE 5B4.—The carriage. A. Upper and lower carriage. B. Trunnion bearings.

The recoiling parts (that is, those that move to the rear when the gun is fired) of a conventional naval gun are either attached to or are housed in the *gun housing* (also called the *breech housing*). The housing and related parts are highlighted in figure 5B6. (Some turret guns and 20-mm guns differ considerably from this type of conventional design, and this description is not intended to apply to them.) Secured to the forward end of the housing is the gun barrel itself. The commonest method of attaching gun to housing is by use of a *bayonet joint* or *interrupted-screw joint*, with a key to lock the barrel against possible rotation. The housing can move parallel to the gun bore axis in ways in the slide. It is normally forced to its forwardmost position (called battery position) by a counterrecoil mechanism (not illustrated in fig. 5B6), which may be either a powerful coil spring or a pneumatic device. When the gun fires, the reaction of the barrel forces the housing aft; this movement is opposed by the counterrecoil mechanism and by a hydraulic recoil brake (also not illustrated in fig. 5B6.) The counterrecoil and recoil mechanisms will be described and illustrated in a later article of this chapter.

Figure 5B6 also indicates the location and some features of the breech mechanism. The type used in most guns of conventional design, including the 5-inch, and illustrated here, is called the *vertical sliding-wedge* type. Further details of its construction and functioning principles appear later in this chapter.

5B2. Gun barrel construction

Superficially, the modern gun barrel resembles very closely its ancestor of several hundred years ago. The old and the new both are thick-walled metal tubes.

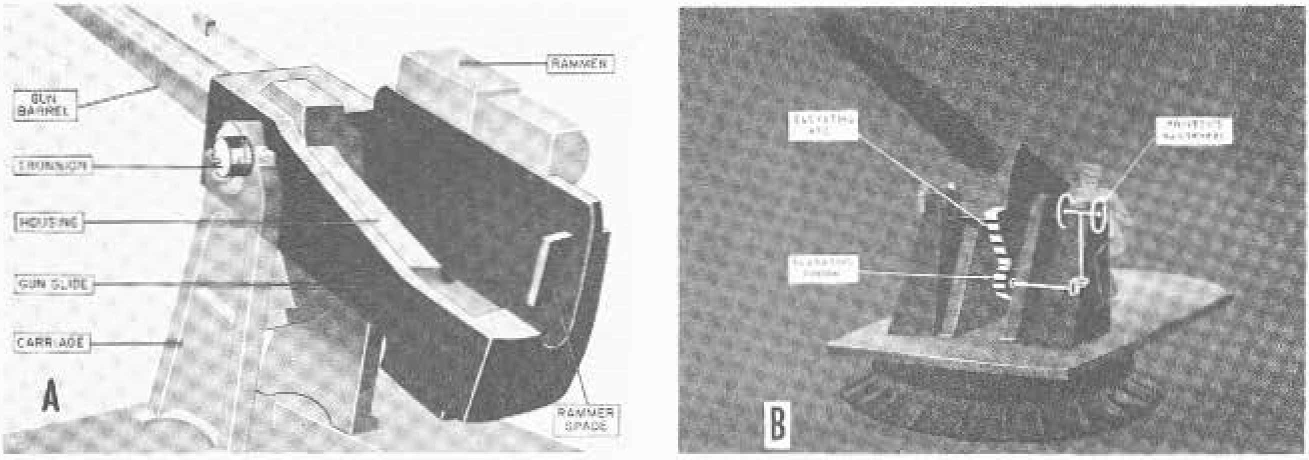

FIGURE 5B5.—The slide. A. Main features. B. Principle of elevating mechanism.

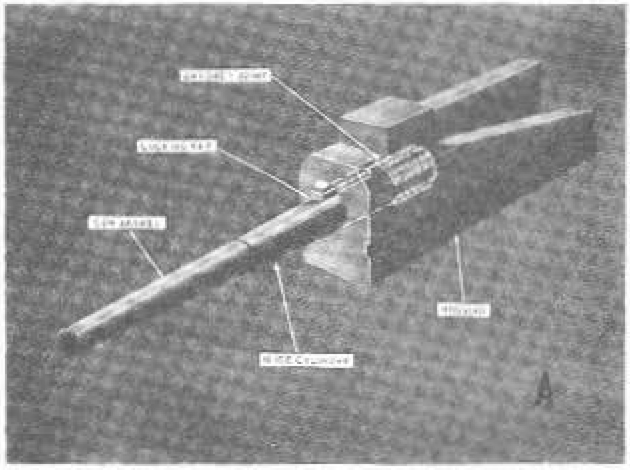

Figure 5B6.—The housing. A. How barrel secures to housing.

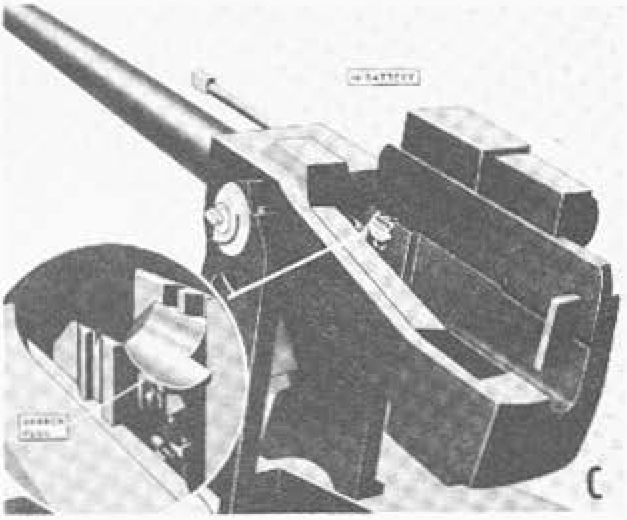

Figure 5B6.—C. Location of breech plug.

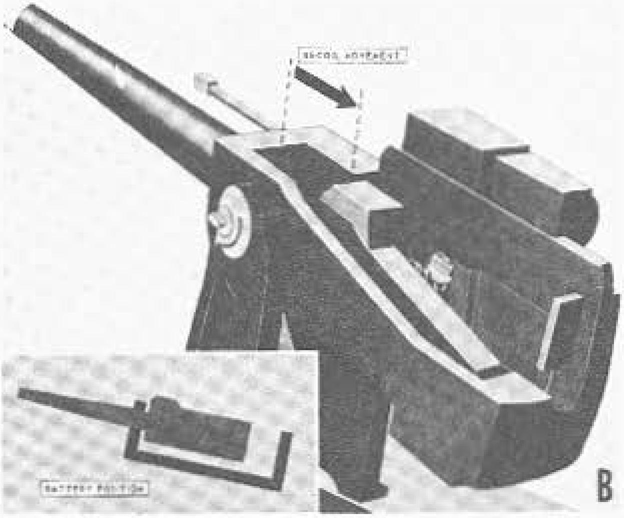

Figure 5B6.—B. Recoil movement.

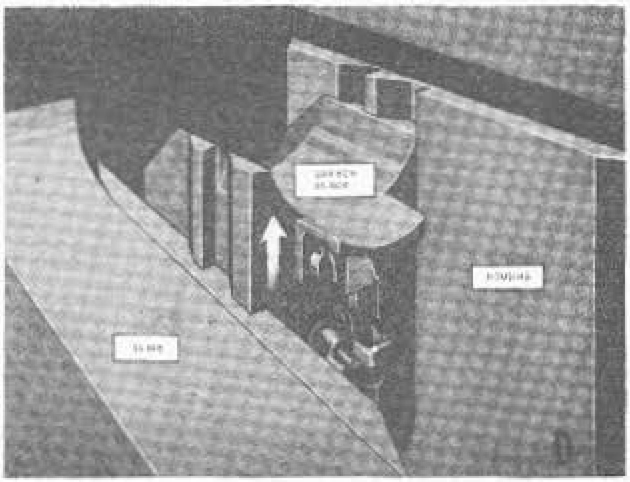

Figure 5B6.—D. Breechblock rising to closed position.

The propellent charge and projectile occupy the breech end when the gun is loaded, and the projectile, when fired, issues from the muzzle end.

But with this the resemblance ends. Figure 5B7 shows in cross section the old look and the new in gun barrel profiles. The difference in shape is very significant. The figure also points out the main features of the contemporary gun barrel. Let us now consider these more closely.

1. At the breech end is a *plug* or *breechblock* which can be opened for loading the gun. Breechblocks take various forms; the illustration shows (as viewed from above) the general structure associated with the sliding-wedge type used in 5-inch mounts. Breechblocks will be discussed in further detail later. Early guns, except for a few custom-made small-arms weapons, were almost invariably muzzle loaders; breech loaders were rarities. Hence the silhouette representing the old gun shows no breech plug.

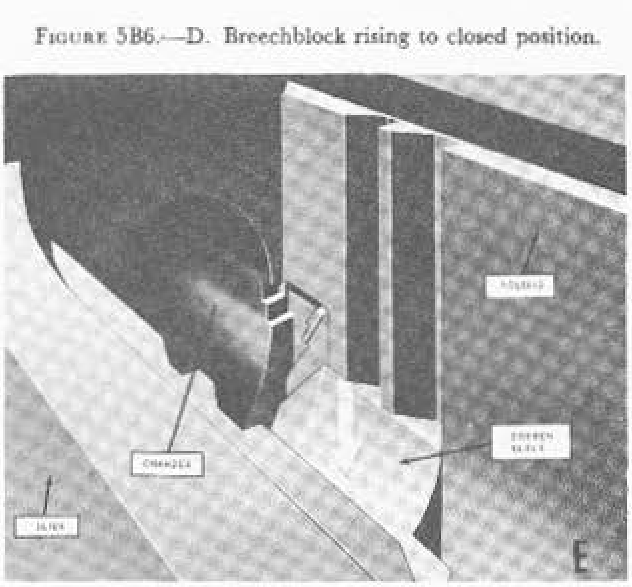

Figure 5B6.—E. Breechblock dropping to open position.

2. Just forward of the breech plug is an enlarged *chamber* to contain the propelling charge.

3. The bore is *rifled*—a set of spiral grooves twists the projectile as it moves toward the muzzle, so that it is spinning when it leaves the gun. Old guns as a rule were smoothbores. In newer types of larger guns, the rifling is cut in a *liner*—a tubular insert that can be replaced when worn. (Fig. 5B7 shows the rifling cut into the liner of an 8-inch turret gun of recent design. The liner reference marks are used for aligning the liner in the gun tube.) In other guns, the rifling grooves are cut into the barrel.

4. As compared with early guns, the barrel walls are much thinner in modern guns, and the taper is much less exaggerated. As will be explained, improved propellants and improved steels have together brought about this silhouette.

Common external features are pointed out in figure 5B7. Many guns have a *bell* at the muzzle, where the metal is made thicker to discourage any tendency to split. Most modern weapons lack a bell, or instead have *lugs*, which are utilized when the liner (see No. 3 above) is replaced. (The lugs serve to anchor the tool used for pulling the liner out.)

The thinnest part of the barrel, just aft of the bell, is the *neck*. Then comes the tapering *chase*, followed by the *slide cylinder*, which moves in a bearing in the slide during recoil. The after part of the barrel is secured to the gun housing. In the conventional 5-inch gun, the breechblock slides up and down in a grooved rectangular breechway in the housing.

Now consider what is between the exterior and the interior surfaces of the barrel—the steel itself. Looking at the profiles of guns old and new (fig. 5B7), it's evident that although both taper from a wide breech end to a narrower muzzle, the taper is much more drastic in the older weapon. Superficially, this difference in silhouette may seem a small matter, but it is actually very important. It indicates the revolutionary developments in propellants and in metallurgy that differentiate the new from the old.

Consider what happens when the propellant in a gun is ignited. As it burns, it turns to hot gas under terrific pressure—up to 60,000 psi in small guns, up to 40,000 psi in larger guns. As the projectile moves along the bore toward the muzzle, the gas pressure goes down. It follows, then, that the chamber wall should be the thickest part of the gun barrel, with the taper from breech to muzzle reflecting the decreasing gas pressure behind the projectile.

However, when black powder was the propellant, the chamber had to withstand the initial shock of this propellant's exceedingly rapid burning rate. Thus, before the projectile was well along the bore, the propelling charge had already developed its maximum pressure as a sudden shock, and the gas pressure was falling rapidly. The breech had to be especially heavy to withstand the shock, but the tube was short because the gas pressure fell so rapidly. In modern guns using pyro or triple-base propellants, the maximum gas pressure is developed far more smoothly, and declines less suddenly. This is reflected to a great extent in the silhouette of the modern barrel.

The thinner barrel walls of modern guns are evidence not only of more effective propellants but also of improved metallurgy of the barrel. Before the '80's of the last century, the surest way to make the barrel of a gun withstand more pressure was to make it thicker. But there were limits to this method. Then it was discovered that by *prestressing*, it was possible to make a gun barrel more resistant to internal pressure. The earliest method of applying this principle was to heat steel ring-shaped jackets, or *hoops*, to high temperatures, then slip them over the gun tube and allow them to cool. As the hoops cooled, they contracted, until at the end of the process they were squeezing the gun tube inside with a pressure of thousands of pounds per square inch. Guns so constructed are known as *built-up* guns, and are still made in sizes over 8-inch.

About the time of World War I, the same principle was applied to monoblock (one-piece) guns in the *radial-expansion* or *autofrettage* process. In this process, a single steel gun tube whose bore is slightly smaller than the caliber desired is filled with hydraulic fluid. The pressure is then built up enough to enlarge the bore permanently about 6 percent. When the pressure is released, the outer layers of the tube tend to return nearly to their original dimensions, while the inner layers, which have been considerably enlarged, tend to maintain their increased diameter. The result is that the inner layers of metal are severely compressed by the contracting force of the outer layers, just as if a hoop or jacket had been shrunk on. In other words, the tube is "self-hooped."

The big advantages of the radial-expansion monobloc gun over the built-up type are simplicity of manufacture and comparatively low cost and weight. Because of the difficulty of working on the single huge forgings required for guns over 8-inch, though, larger weapons are still built-up. Or the two methods of prestressing may be combined.

5B3. Rifling

As the Foreword to this course explains, early guns were capable of hurling a projectile to a respectable range, all things considered. Large cannon could heave an iron or stone ball at a target a couple of miles away, and actually overshoot. But their fire was so inaccurate that a gun capable of an extreme range

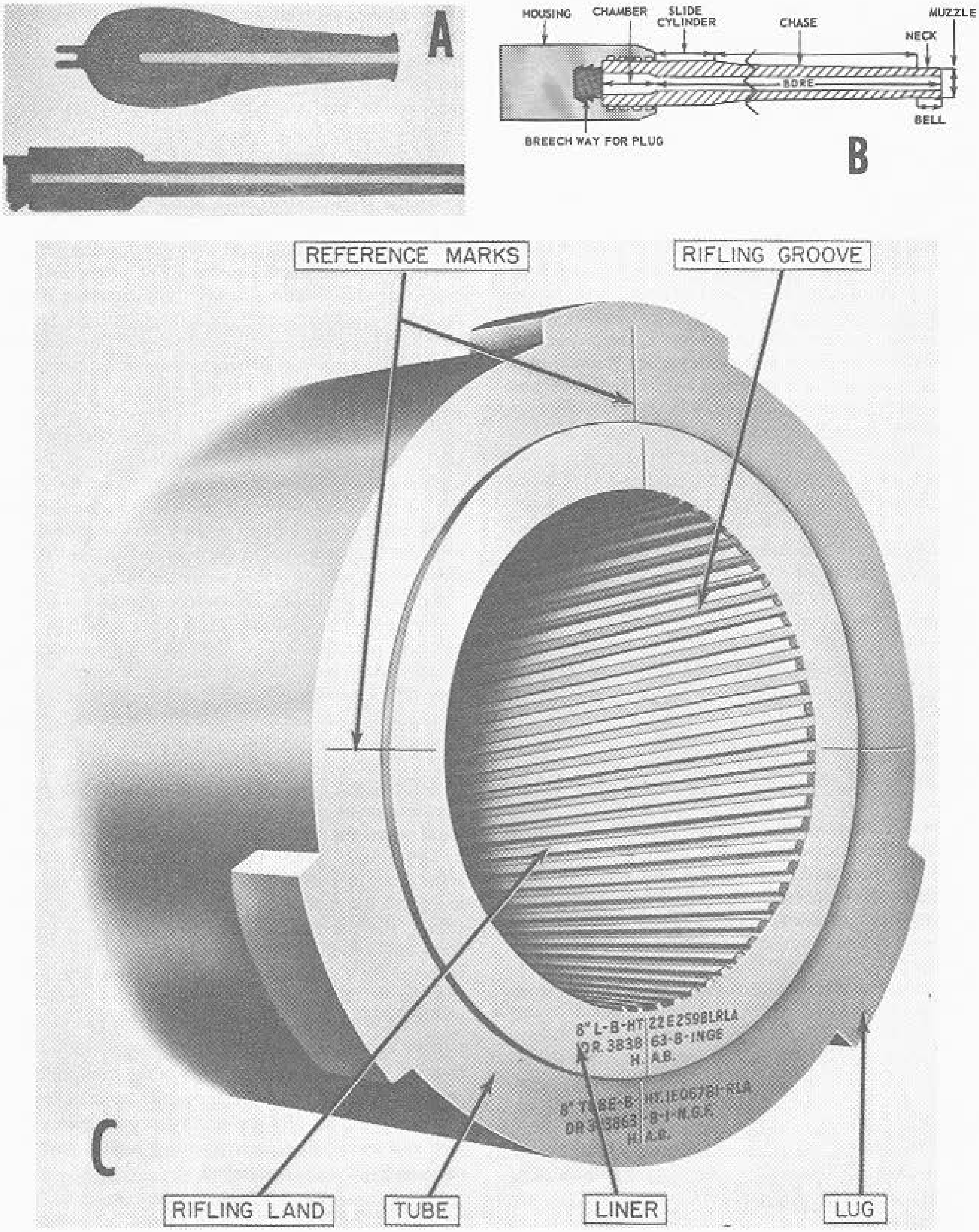

FIGURE 5B7.—The gun barrel. A. Old and new gun barrel profiles. B. Main parts of the barrel. C. Muzzle end of 8-inch turret gun, showing the rifling and the liner.

of about 2,000 yards was considered reasonably certain to hit its target only at point-blank range—in this case, up to 80 or 100 yards.

There were several reasons for this poor showing. One was that, other things being equal, a light projectile will travel a lesser distance, and be more affected by wind and air resistance, than a more massive one. Since these old smoothbore cannon could fire only round shot (and the maximum volume of a sphere is rigidly determined by its radius), it was difficult to make the projectile sufficiently massive. An elongated projectile could, of course, be made more massive by making it longer. But unless it can be made to spin around its long axis, an elongated projectile has, as some ballisticians put it, the ballistics of a brick, and its flight path or trajectory is much more erratic than that of a spherical one. Hence, because a smoothbore cannon cannot make its projectile spin, round shot were the only alternative.

There were other reasons, too, for the inaccuracy of early gunnery. One standard method for loading the classical type of seagoing muzzle-loading smoothbore required the gunner first to ladle into the breech end of the bore a measured quantity of black powder (later, a paper- of cloth-wrapped "cartridge" was used), and then to ram down the bore the round shot wrapped in a fabric "patch." Since close clearances would have made loading impossible, the shot was a fairly loose fit. (See figure 5B8.) When the gun was fired (by lighting off a priming mixture which filled a "touch hole" leading into the blind breech end of the bore), the patch was supposed to seal the powder gases behind the loose-fitting ball projectile. But much of the gas would blow by one side or the other. The result was that a lot of the gas pressure was wasted because it didn't serve to propel the ball, and as the ball left the muzzle it was not likely to be traveling along the bore axis. Hence the ball was slow (300 fps was a likely speed, as compared with 2,700 fps in conventional modern naval medium-caliber guns), and its trajectory predictable only in the most general fashion.

Rifling the oldtime muzzle-loading cannon was impracticable because of the difficulty of ramming close-fitting ammunition down the length of the bore. Such ramming was possible only in small arms (which is why rifled shoulder weapons were used by infantry as far back as the American Revolution), but not in cannon.

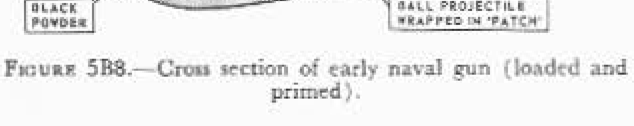

Figure 5B8.—Cross section of early naval gun (loaded and primed).

Figure 5B9 illustrates how these problems are solved in modern conventional naval guns. First of all, the projectile is elongated, with an ogival forward end. Breech-loading permits an enlarged *chamber* which contains more propellant of a slower burning and less erratic type than black powder. The projectile has a copper or alloy *rotating band*. The chamber is connected to the bore proper by a short tapering *forcing cone*. When the projectile is rammed into the gun, the rotating band forcibly engages the forcing cone.

And the gun bore itself is different. It isn't smooth. It is grooved or *rifled*, and the grooving is *helical* or *spiral*. (Fig. 5B9). The rifling begins at the forcing cone and continues to the muzzle. In all naval guns and small arms except the .45 caliber pistol, the rifling has a *right-hand* twist. The twist may be *uniform* (generally around 1 in 15 or 20 times the bore diameter), or *increasing* (as in the 40-mm gun) so that the twist becomes sharper as it nears the muzzle.

The number, depth, and width of grooves varies in different designs. Small arms have relatively few grooves, and cannon (fig. 5B9) have a large number. Groove width may decrease toward the muzzle. The bore diameter or *caliber* of a rifled gun is measured from the top of one *land* (the high surfaces between grooves) to that on the opposite side of the bore. Since the rotating band for the projectile is slightly larger than the nominal gun bore diameter, the rifling cuts into or *engraves* the softer metal of the rotating band when the projectile is rammed, as can be seen in figure 5B9. When the gun is fired, the projectile spins at an increasing rate as the propellent gas forces it toward the muzzle. (With right-hand twist in the rifling, the direction of spin is *clockwise* as viewed from the breech.) Moreover, because of the close fit between the rotating band and the rifling it engages, the gas is effectively sealed behind the projectile. (This explains why rifling is made with grooves that narrow toward the muzzle; the grooves continue to engrave wider and wider notches in the rotating band, ensuring a tight fit as the projectile approaches the muzzle.) Figure 5B9 shows how a projectile might look as it leaves the muzzle, spinning rapidly and with rotating band deeply engraved.

5B4. Breech mechanisms

A previous article has already noted that rifling was applied to small arms quite a long time ago. (Rifled

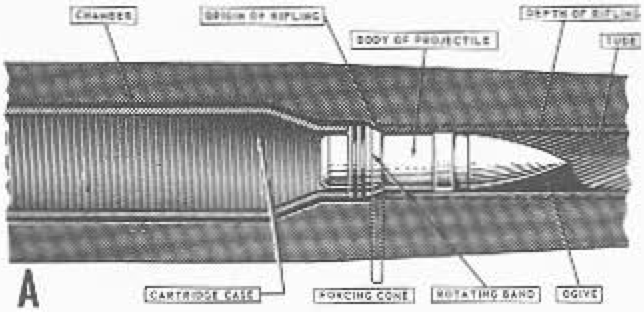

FIGURE 5B9.—Rifled guns. A. Cross section of gun chamber (fixed ammunition).

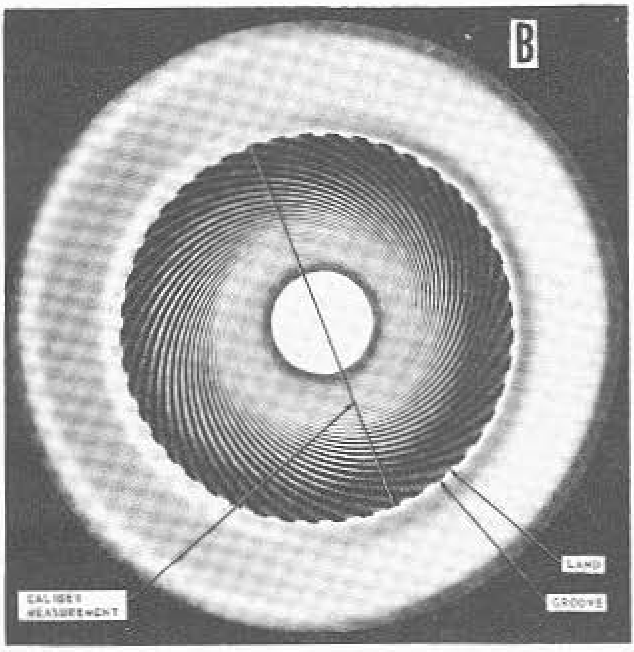

FIGURE 5B9.—B. Rifled bore (viewed head-on).

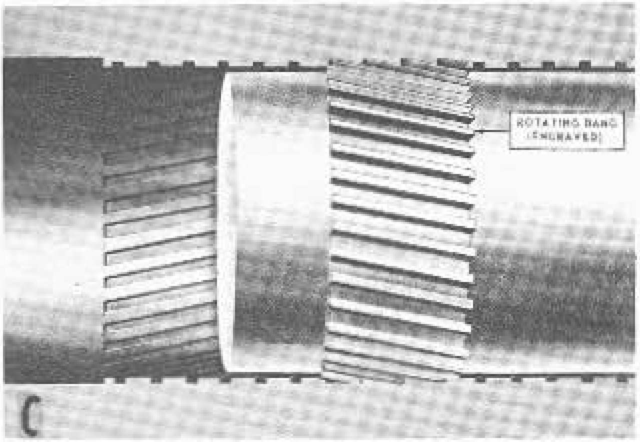

FIGURE 5B9.—C. The rifling engraves the rotating band.

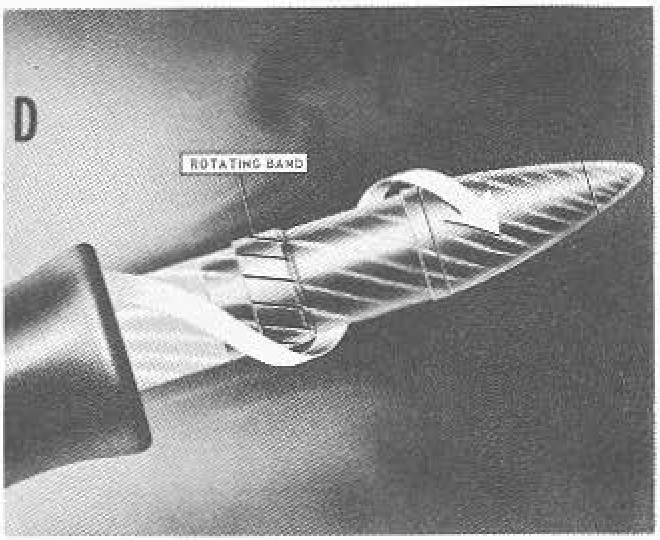

FIGURE 5B9.—D. Projectile spin during flight.

small arms were used in the American Revolution, and enabled American sharpshooters to stand at a distance and pick off the redcoats, whose smoothbore muskets were no match for the American rifles either in range or accuracy.) But it could not be applied in a practical way to artillery, either seagoing or ashore. Ramming large-caliber ammunition from the muzzle was excessively difficult if the projectiles fitted the rifled bore closely, and the rifling was useless if they didn't.

The key to making effective and practical rifled cannon lay in the development of effective and practical mechanisms to permit loading from the breech end of the gun rather than the muzzle.

With but one exception (which is discussed in volume 3 of this series of textbooks), all naval guns in present use in calibers 40-mm and larger use 1 of 2 general types of breech mechanism. One, which is used in bag guns only, is the *Welin interrupted-screw* type. The other, used in 40-mm, 3-inch, 5-inch, and 6-inch guns, and in 8-inch turret guns for case ammunition, is the *vertical sliding-wedge* type. Consider the interrupted-screw type first.

Interrupted-screw breech mechanism. The screw is a widely used device for securing something against a heavy thrust. Figure 5B10 shows how a continuous screw closure might be used to seal the breech end of a metal tube to make a gun of it. Such a breech closure or plug would of course require unscrewing to open the breech after firing. The mass of such a device, designed to withstand the 40,000 psi gas pressure developed in a typical large-caliber cannon, would inevitably be considerable. (The breech plug of a 16-inch naval gun, for example, weighs about 1,400 pounds.) Turning such a screw through several revolutions would not be easy.

Application of the principle of the interrupted screw

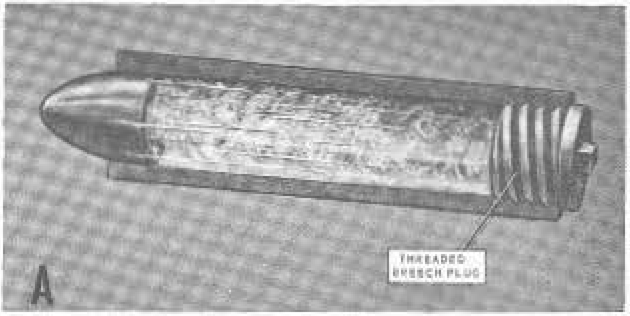

Figure 5B10.—Principle of the interrupted-screw breech-mechanism. A. Continuously threaded breech plug.

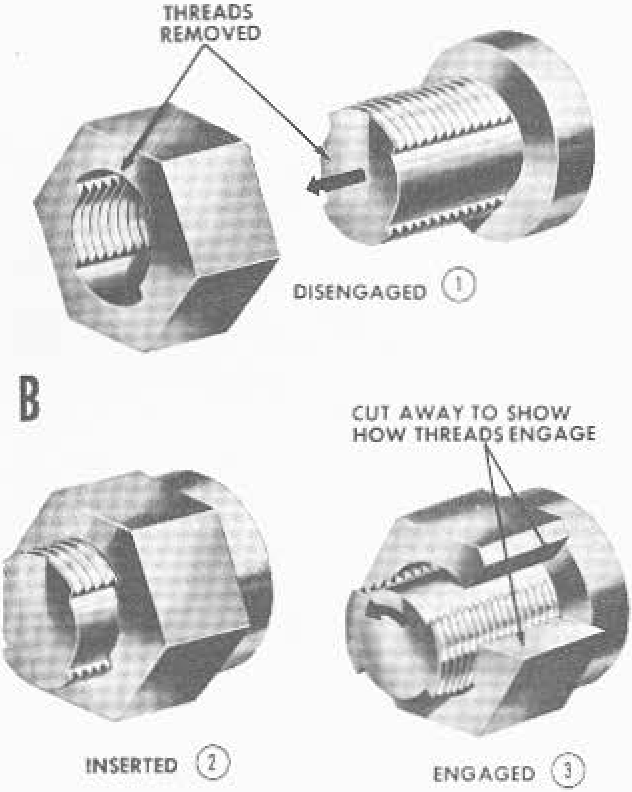

Figure 5B10.—B. Interrupted-screw bolt and nut.

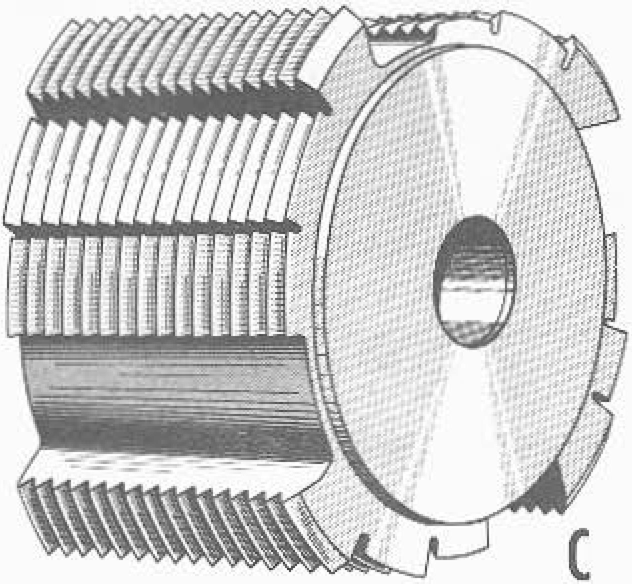

Figure 5B10.—C. Stepped-thread plug (Welin type).

reduces the number of turns required to a fraction of a revolution. If half the threaded area is removed from a bolt (representing the breech plug) and the nut (representing the breech or *screw box*), then it is possible to insert the bolt (1 and 2 in figure 5B10) and engage the two by turning the bolt 90° (3 in figure 5B10).

The disadvantage of this straightforward application of the interrupted-screw principle is that half the threaded area must be removed, and this reduces the "holding power" by reducing the amount of thread area that can be engaged. This disadvantage is partly obviated by the *Welin stepped-thread* breech mechanism. In this arrangement, both plug and breech have *steps*. The steps are arranged in groups, with each group of four ascending (or descending) steps occupying one 90° sector. On the plug (figure 5B10), the lowest step of each group is blank, and the others are threaded. On the breech screw box the highest step in each group is blank, and the others threaded.

Figure 5B11 shows how an obsolete 14-inch breech mechanism functions in closing. The principle is the same on present-day 8-inch and 16-inch bag guns now in the Fleet, but in those ships the plug swings in a vertical arc (as in figure 5B12) rather than a horizontal one. Note that there are two distinct motions of the plug in opening and closing—a *translating* movement in which the plug swings on a massive *carrier* hinged to the side of the breech, and a *rotating* motion in which the plug screws into the screw box. Both of these may occur together in the final stages of closing or the beginning of opening.

Now follow the breech-closing action as illustrated in figure 5B11:

1. From its open position, the plug swings around toward the screw box. As the plug moves in, each high threaded step of the plug fits into a low blank step of the screw box (fig. 5B11). The high threaded steps on the screw box fit into the low blank sectors of the plug. The other threaded steps also clear each other in this position.

2. When the plug is well into the screw box, but has not yet begun to rotate, a *cam roller* on the plug contacts a *camway* in the screw box. (Figure 5B11 shows how the plug must rotate to engage the screw box.)

3. During the last part of its translation into the screw box, the plug's cam roller engages the camway

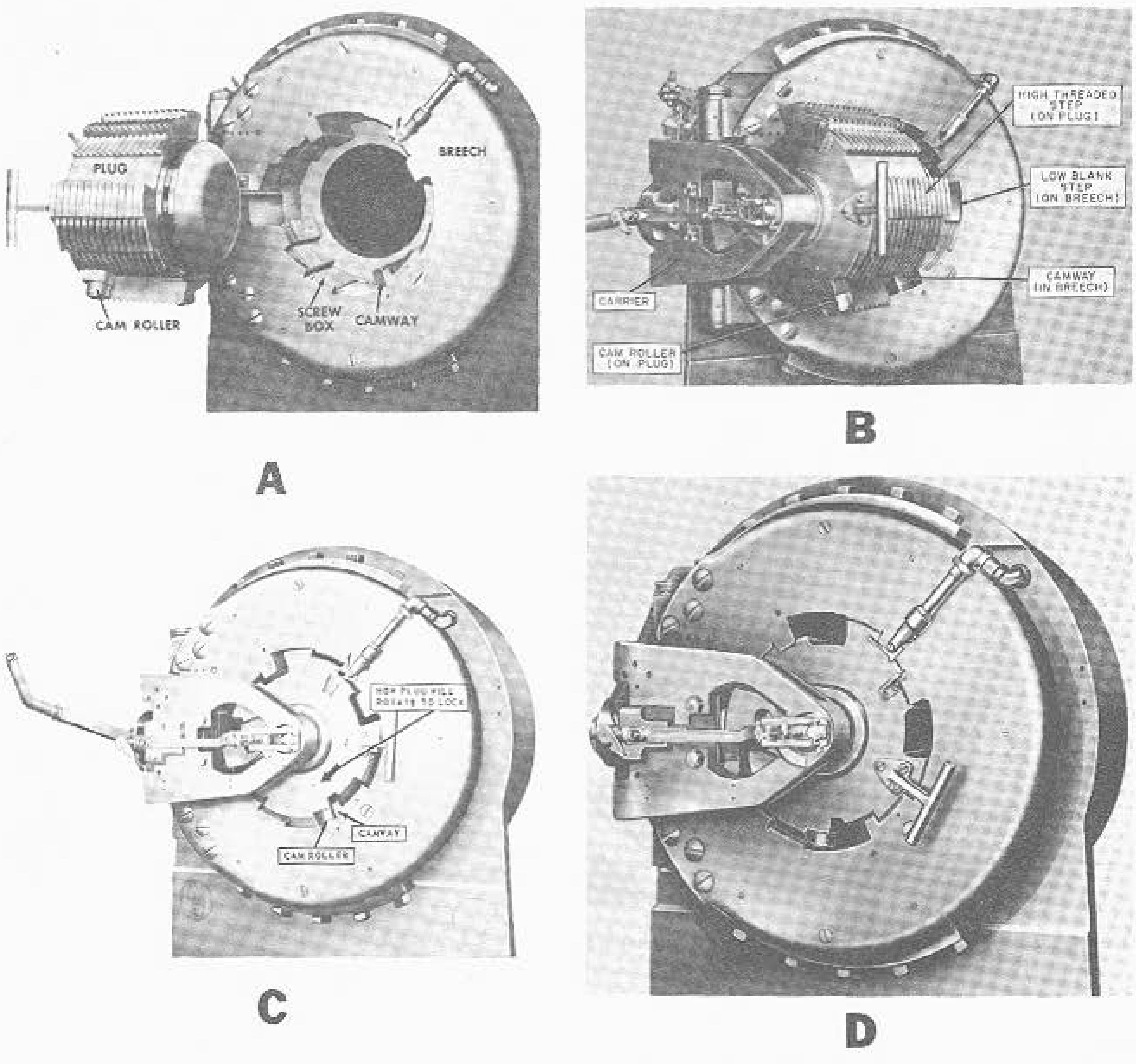

FIGURE 5B11.—Interrupted-screw breech mechanism. Steps in closing.

and the plug turns so that the mating threads on box and plug engage. Figure 5B11 shows the breech closed, locked, and ready for firing.

Notice the two great advantages of the Welin-type screw box and plug:

1. About 75 percent of the engaging surfaces of plug and screw box are threaded.
2. The plug requires only about 27.5 degrees of rotation for full engagement and locking.

Compare these characteristics with the original bolt and nut, and you can see the improvement.

Welin-type breech mechanisms may have 3, 4, or even 5 steps, counting the blank sectors. In most modern installations, the plug swings vertically up into the screw box (fig. 5B12) rather than horizontally as in the 14-inch breech pictured in figure 5B11.

Because of the large size of the guns on which they are generally found, interrupted-screw plugs are too heavy for unassisted operation by hand. (As noted above, on a 16-inch gun the plug may weigh as much as 1,400 pounds.) Interrupted-screw mechanisms for these large guns are therefore generally fitted with air- or spring-powered devices to aid the gun crew in operating them. These devices will be discussed further in chapter 7 on turrets.

The discussion of the interrupted-screw type breech mechanism so far has concentrated on the principles of operation of the engaging parts—the plug and

FIGURE 5B12.—Interrupted-screw type breech mechanism (16-inch) now used in the Fleet.

screw box. There remains one other important function for this type of breech mechanism to perform. Besides withstanding the brute thrust of the high-pressure propellent gas in the chamber during firing, it must also prevent *leakage* of the burning, toxic gas into the turret or mount. It does this by means of an *obturator* or sealing device—the *DeBange gas-check system.*

The DeBange gas-check system is used in all United States Navy bag guns. Its main parts are the *mushroom, gas check pad, split rings,* and *gas check seat.* Figure 5B13 shows a typical gas-check assembly.

The biggest component is the mushroom. (In a 16-inch gun it weighs 220 pounds.) It consists of a large flat steel head at the forward face of the plug, with a long steel stem extending through a hole in the plug and protruding from its rear face. Through the center of the stem and head passes a hole called the *primer vent.* The primer fits in a primer chamber in the after end of the mushroom stem. (The primer vent does for the modern bag gun what the touch hole did for its ancient counterpart.)

Between the mushroom head and the forward face of the breech plug, and bearing against a smooth section of the breech chamber called the *gas-check seat,* is the *gas-check pad.* This is a thick flat resilient doughnut-shaped disc of plastic, whose outer and inner edges are protected from wear by steel split rings. The system works this way:

1. When the gun is loaded and the breech plug is closed, the ignition charge in the powder bag (not shown in figure 5B13) is right up against the mushroom head. (The ignition charge is composed of black powder. When the ignition charge explodes, it sets off the smokeless powder which comprises the bulk of the propelling charge.)
2. The primer is in the primer chamber. When the gun is fired, the primer goes off, sending a hot flame down the vent in the mushroom stem. That ignites the black powder ignition charge, which in turn sets off the smokeless powder.

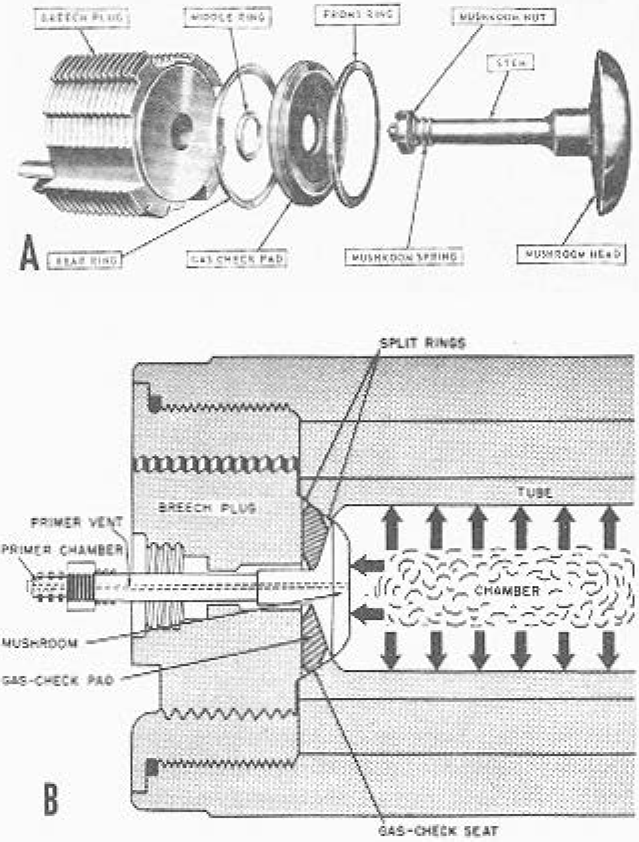

FIGURE 5B13.—DeBange gas-check system. A. Exploded view. B. Cross section, showing operations.

3. As the powder burns, the expanding gases push hard against all sides of the breech chamber, the projectile, and the mushroom head. The only thing that can yield is the projectile, which begins to move up the gun bore.

Meantime the pressure goes higher and higher up to 40,000 psi until the projectile is fully under way, when the pressure tapers off.

4. As the pressure increases, it shoves the mushroom head hard back against the gas-check pad. The pad expands against the gas-check seat, effectively sealing the breech against the escape of gas. And note this feature of the device—the greater the gas pressure, the harder the mushroom compresses the pad against the gas-check seat.

Vertical sliding-wedge breech mechanism. The interrupted-screw type of breech mechanism has its advantages. Since it has its own obturator mechanism, it can use propelling charges in silk bags which are consumed in firing, and once the bore is cleared of residual gases and burning fragments, the next round can be loaded without requiring extraction and disposal of the used container for the fired propelling charge. It can also be used (though the U. S. Navy has no guns of this type in active service at the present time) to fire case ammunition.

But this kind of breech mechanism also has disadvantages. One is really to be ascribed particularly to the nature of the ammunition itself. Because of the fire hazard, a crewman must inspect the chamber after each round fired to ensure that it is safe to load the next round. This slows the rate of firing. More important, this kind of breech mechanism is complex in operation. Coupled with the number of separate ammunition details that must be handled per round (totaling up to 8—primer, projectile, and 6 powder bags), this type of breech mechanism is not easy to adapt to automatic or semiautomatic operation.

For this reason, guns 40-mm and up, of late designs, use a breech mechanism that works on a completely different principle—the *sliding-wedge* breech mechanism. This uses a sliding element to block off the breech opening. The sliding breechblock may move either horizontally or vertically.

Figure 5B14 shows in simplified form the elements of a vertical sliding-wedge breech mechanism as it looks from the side, with the breechblock or plug in its lowered (open) position. The dotted outline represents the breechblock in its raised (closed) position. Notice that the grooves in which the plug can slide up and down are not exactly vertical; they're slanted slightly forward. It is clear that in its open position the plug is noticeably aft of its closed position. Or, in other words, in rising to the closed position, the breechblock moves forward as well as upward.

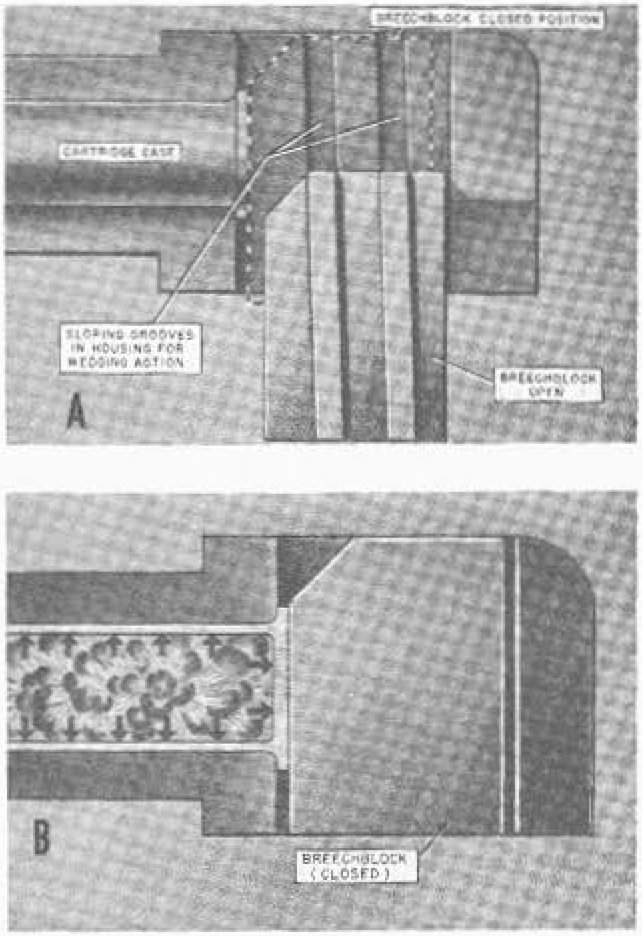

FIGURE 5B14.—Sliding-wedge breech mechanism. A. Breechblock movement. B. Sealing by expansion.

The effect of the breechblock's forward movement as it closes is to wedge the cartridge case into the gun chamber (hence the name sliding-*wedge* breech mechanism).

The method of obturation used in this type of breech mechanism depends on the cartridge case for sealing effect. There is no sealing device incorporated into the breech mechanism. Figure 5B14 shows what happens when the gun fires. As the propelling charge burns, the hot powder gases expand against the sides of the cartridge, which in turn expand against the smooth walls of the chamber and against the breechblock. Since the cartridge case tightly seals off the entire length of the chamber, the gases can escape only forward, driving the projectile. None can escape through the breech. This is sealing by *expansion.*

But after the gun fires, the chamber is not clear. The cartridge case is not designed to disappear with the burning propelling charge, and it must be removed from the chamber before a new round can be loaded.

Therefore all guns with sliding-wedge breechblocks have one or a pair of *extractors* as part of the breech mechanism. In 40-mm, 3-inch, and 5-inch guns the extractors are mechanically operated by breechblock movement. Figure 5B15 shows several views to clarify their functioning.

When the breechblock is down (open) the extractors are pulled back. In these guns the extractors perform the dual function of locking the breechblock down and extracting the case. As a fresh round of ammunition is rammed into the chamber, the rim of the cartridge case engages the extractors, and pulls them forward. This unlocks the breechblock, which is then forced upward by a spring mechanism. The round is chambered, the breechblock moves upward, and the extractor tips move forward in a coordinated group of movements. When the breechblock is fully closed, it has forced the round fully into the chamber, and the extractor tips have seated in recesses in the housing. (Figure 5B6 shows those recesses).

After the gun fires, the breechblock is opened by camming action. (The details of this action vary in different gun designs, and will be described in subsequent chapters.) As the block drops, the extractors retract. They haul the fired cartridge case out of the chamber and catapult it to the rear into the slide. At the extreme of their rearward movement, they lock the breechblock down until the next cartridge case again pulls them forward to unlock the breechblock.

Figure 5B15 shows the type of breech mechanism used in conventional 3-inch and 5-inch guns. In 40-mm guns the sequence of operations is similar, but the extractors are pivoted on a spindle, and lock the breechblock down with a pair of hooks. In 3-inch and 5-inch breech mechanisms the extractors are not pivoted, but rock back and forth on their forward curved surfaces, which bear against the gun housing. The movement of each extractor is controlled by two lugs;

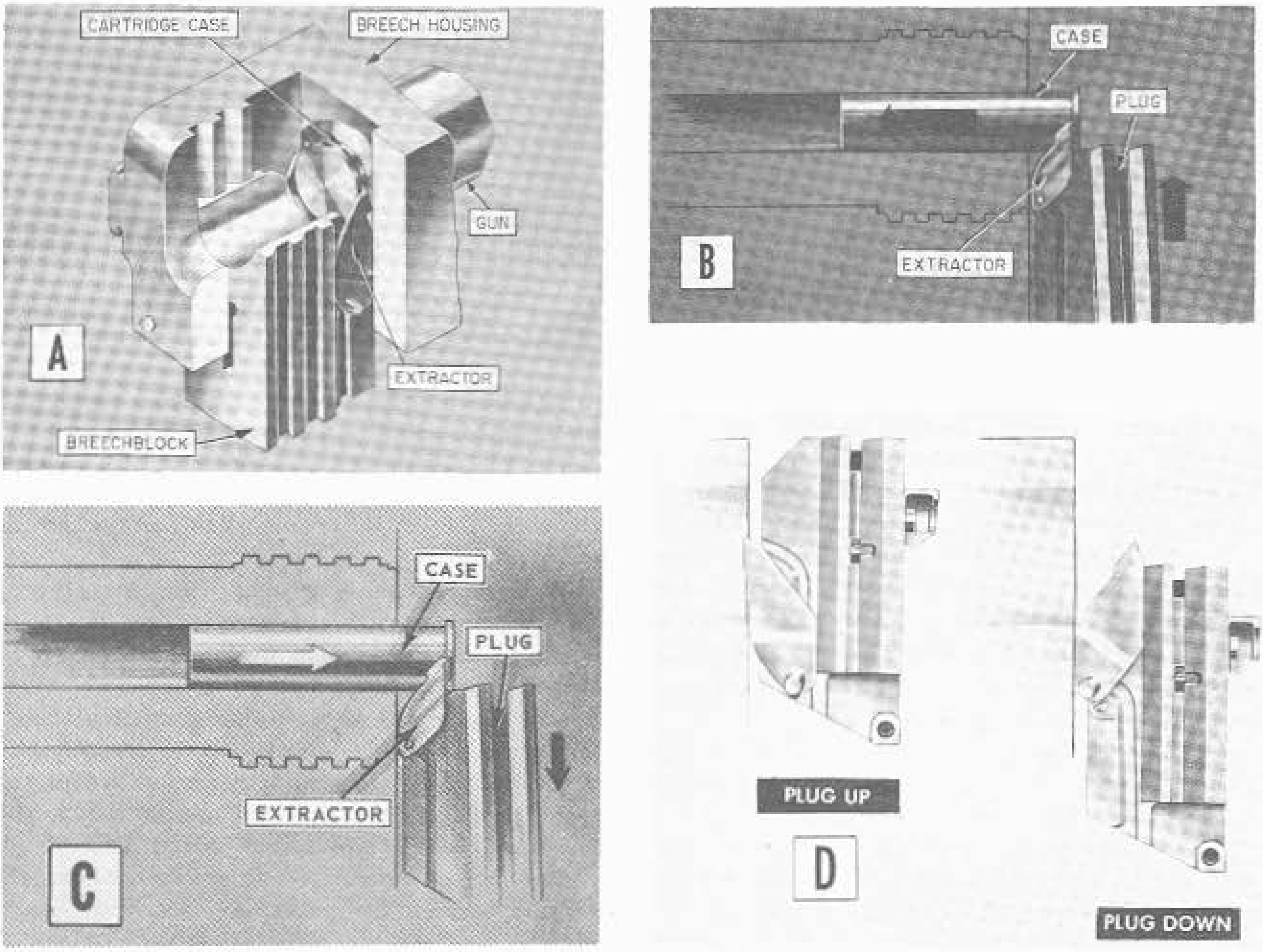

FIGURE 5B15.—Sliding-wedge breech mechanism. Extractor action. A. How the extractors grip the cartridge case. B. Ramming. C. Extraction. D. Extractor positions, plug up or down.

the inner lug engages a camming groove in the breechblock, and the outer one oscillates in a small curved groove in the housing. It is also noteworthy that in 3″/50 guns equipped with power loaders the breechblock-locking function of the extractors merely supplements the normal functioning of another locking mechanism (described in another chapter). But, regardless of the method of locking, the extractors unlock the breechblock when they are moved forward by the cartridge case being loaded.

In contrast to the sliding-wedge breech mechanisms described above, which are operated through mechanical camming and spring action when the gun housing moves backward and forward in recoil and counterrecoil, the breech-mechanism in 6-inch and 8-inch case guns are operated hydraulically.

The descriptions above do not apply to the very newest designs of 3-inch and 5-inch gun mechanisms with sliding-wedge type breech mechanisms. See volume 3.

Bolt-type breech mechanisms. The sliding-wedge and interrupted-screw types of breech mechanisms are not used in guns 20-mm and smaller. These use variants of the bolt principle. The bolt is a breechblock which moves in line with the bore axis—forward to close the breech, and to the rear to open it.

In so-called *bolt-action* weapons like the old M1903 rifle (the famous "Springfield" of World War I) the bolt is operated by hand.

In *gas-operated* weapons like the Browning automatic rifle M1918A2 (the "BAR") or the M1 rifle ("Garand") the bolt is cammed to the rear by a piston actuated by a small amount of propellent gas diverted from the barrel while the bullet is moving through the bore. Spring action forces the bolt forward to ram the next round home.

In *recoil-operated* weapons like the Browning machine guns, a complex of mechanical parts is forced to the rear to varying distances by recoil, and is then driven forward by springs to reload and fire the next round.

In *blowback-operated* weapons like the 20-mm AA gun and the Thompson or M3 submachine guns ("Tommy" guns) the bolt is pushed back, when the gun is fired, by gas pressure in the chamber, and a spring mechanism afterward forces it forward to ram the next round home.

Aircraft machine gun designs use all three of these actuating forces (gas, recoil, and blowback).

5B5. Percussion and electrical firing systems

An earlier chapter, on ammunition, describes the types of primers that are used in gun ammunition to initiate the propelling charge. With regard to functioning, it distinguished between percussion, electric, and combination primers. It also described a special type of primer used in bag ammunition. (The other types are all associated with case ammunition.)

Firing mechanism for case guns. The commonest ammunition, and the commonest guns, are of the case type, and it is appropriate to look at these first. Figure 5B16 shows the principal common element of a percussion or combination firing system. Of course, not all the elements of a percussion or combination firing system are common to all gun designs. Since this chapter is concerned primarily with common elements, other important parts that are not common are omitted.

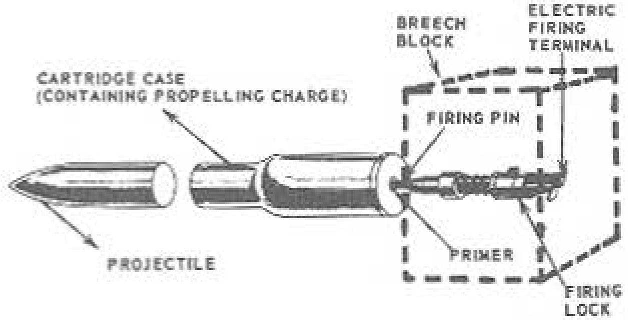

FIGURE 5B16.—Firing mechanism for sliding-wedge breech mechanism.

The important common element is the *firing mechanism,* sometimes called the *firing lock.* This part is secured in the breechblock, but is not considered part of the breechblock, and is very easily removed for cleaning. The illustration shows a combination electric-percussion firing mechanism typical of case guns 3-inch and larger.

Mechanical linkage in the breechblock operates the firing mechanism in the following ways:

1. It retracts the firing pin or striker when the breechblock is not fully closed.

2. It cocks and releases the firing pin or striker to fire the cartridge case by percussion. The part in the breech mechanism that does this is called the *sear.* (Not illustrated in figure 5B16.) In different gun designs this function is accomplished in different ways:

a. In the conventional 5-inch gun, for example, the firing pin or striker moves into contact with the primer in the cartridge case as soon as the breech closes fully, and remains in contact until the breechblock begins to drop. In percussion fire, a massive spring-loaded part in the firing mechanism is released by the sear in the breechblock to strike a bushing, through which the impact is delivered to the firing pin and thus to the primer.

b. In 3″/50 guns, the firing pin contacts the primer as soon as the breech is closed, and remains in contact unless the percussion firing linkage is actuated. When this happens, the sear (which looks and works differently from its namesake in the 5-inch gun) retracts the spring-loaded firing pin and releases it to strike the primer.

c. In 40-mm guns the firing pin automatically strikes the primer as soon as the breech is fully closed. Firing is controlled by regulating rammer action, as described in a later chapter. The 40-mm firing mechanism is a percussion-only device.

d. In 6-inch case guns the firing mechanism closely resembles the conventional 5-inch firing mechanism briefly discussed above. In 8-inch case guns, however, the firing mechanism is stripped to the essentials needed for electric firing only. It is not a combination device. The firing pin retracts when the breech is open, and maintains contact with the primer at all times when the breech is closed. When it must be fired by percussion in emergency, a special percussion attachment must be rigged for the purpose, and a special type of cartridge case equipment with percussion primer must be substituted for the normal service cartridge, which has an electric primer.

In electric firing (for which all the mechanisms mentioned above are adapted, except the 40-mm and some older 3-inch hand-loaded mounts), all that is necessary is for the firing pin or striker to maintain good electrical contact with the case primer. When the firing circuit is closed, current passes through the cable and the firing pin through the primer's contact and filament, then by way of the cartridge case and gun to ground. The breech mechanism device which retracts the firing pin automatically prevents firing both by percussion and electrically when the breech is not fully closed.

Percussion firing linkage (for case guns). Mounts (40-mm and larger) in which percussion firing is considered an alternate rather than an emergency method of fire, conventionally have foot pedals at the pointer's station for control of percussion fire.

In 40-mm mounts, depressing the pedal part way causes an electrically driven firing linkage to release the rammer and initiate firing. If the electrically driven linkage is not functioning, depressing the pedal all the way initiates firing mechanically. In either case, the actual firing in the gun is done by percussion.

In 3-inch mounts of the older hand-loaded type, "electric" firing is an alternate method, but here, too, so-called "electric" firing is done by percussion; the percussion firing mechanism is actuated by a solenoid. "Percussion" firing is done by depressing the foot pedal; this operates the firing linkage directly.

In newer 3"/50 mounts with automatic loading equipment, percussion firing is an emergency expedient, and must be done by operating a control on the slide.

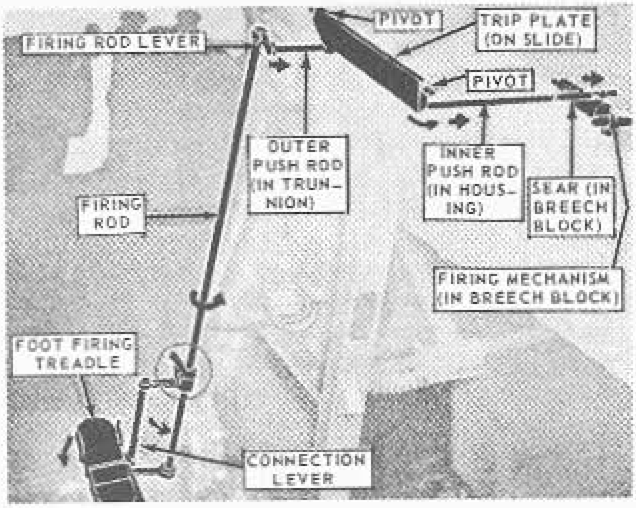

FIGURE 5B17.—5"/38 percussion firing linkage. (Simplified schematic.)

Figure 5B17 shows in simplified form the firing linkage for a conventional 5"/38 mount. Any percussion firing linkage from a foot pedal to the slide or breechblock uses similar mechanical elements. The little arrows show how each part of the linkage moves when the pointer steps on the treadle. The treadle tilts down, swinging the rectangular connection lever assembly aft, and so rotating the firing rod. A firing rod lever at the top of the firing rod pushes the outer push rod, which runs inboard through the inner surface of the slide. The trip plate transmits the push to the inner push rod in the housing. If the breechblock is fully closed, the inner push rod accomplishes the entire purpose of this linkage, which is to push the sear to the right. (It will be recalled that the sear releases the cocked firing mechanism.)

Note two important safety features of this linkage:

1. The trip plate can push the inner push rod only when the gun is completely in battery.

2. The inner push rod can push the sear only when the breechblock is fully closed.

In 6-inch case-type turret guns percussion firing is an alternate method, and the general operation resembles that in conventional 5-inch mounts.

In 8-inch case-type turret guns percussion firing is an emergency method. As an earlier paragraph in this article has pointed out, it requires attachment of a special percussion firing accessory and use of a special cartridge.

Bag-type firing lock. In bag guns the primer is in a small cylindrical case loaded separately from the remainder of the round into a primer chamber. When the gun fires, the spit of flame from the primer passes through the primer vent in the mushroom stem of the DeBange mechanism and ignites the ignition charge on the after end of the rearmost powder bag. This general arrangement is illustrated in figure 5B13.

The primer chamber is in the mushroom stem, and the firing operation is carried out with a *firing lock* which by means of an interrupted-screw joint fits onto the after end of the mushroom stem. The firing lock in general performs the same function as the firing mechanism in a sliding-wedge breechblock. All bag guns now in active use in the Fleet use the same firing lock, the Mark 14. (See figure 5B18.) It is described in further detail in the chapter on turrets. It has a little sliding-wedge type breech mechanism, which is mechanically linked to the gun's breech plug so that it normally closes and opens with the plug. It cannot fire the primer unless the plug is closed and locked. However, it can be opened while the plug is locked so that a defective or misfired primer can be replaced.

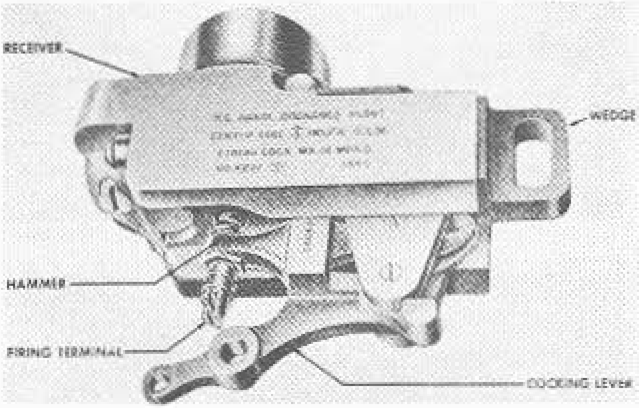

FIGURE 5B18.—Mark 14 firing lock (for bag guns).

For electric firing, the firing lock has a terminal to which a lead from the electrical firing circuit can be attached. The firing pin in the lock is kept in contact with the bag combination primer when the lock is fully closed, to permit electric firing. For percussion firing a lanyard is connected to the cocking lever on the lock; pulling steadily back on the lanyard first cocks and then releases a hammer which strikes the firing pin.

Electric firing systems. So far, the discussion here of electrical firing has dealt with electric or combination primers, and with the firing mechanism proper—which has as electrical elements only an insulated firing pin and a quick-disconnect terminal to which a firing lead or cable is attached. But this is only the final part of the electrical firing system.

Figure 5B19 shows schematically the elements that will be found in a typical electrical firing system for a mount or turret. The diagram does not show scalar distances or the physical locations or appearance of the elements.

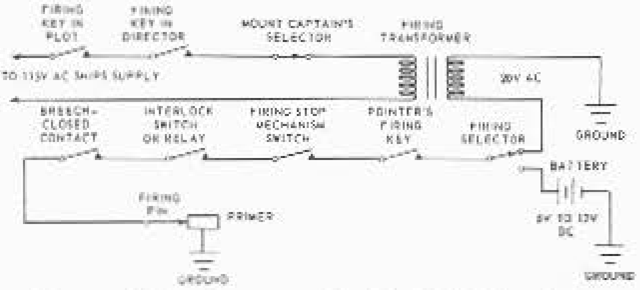

FIGURE 5B19.—Representative electrical firing circuit.

Firing under normal service conditions is performed using the ship's 115-V ac-c supply as a current source. Trace the circuit beginning with this source. There are switches (not shown on the schematic) in fire-control plot which determine where control of automatic fire will be placed, and at least one *firing key* on the stable element or stable vertical in plot. (The key is a spring-loaded normally open switch which may be mechanically latched in closed position.) There is a firing key in the director, and, in some mounts (like the 3"/50 with automatic loader), a selector at the mount captain's station for cutting one or both guns of a twin mount in or out of the circuit. All these are in the 115-V line to the primary of the *firing transformer* located at the mount.

The firing transformer's secondary feeds 20-V a-c to a *firing selector* switch (sometimes called a *firing snap switch*). This switch, generally at the pointer's or mount captain's station (depending on the mount concerned), permits selection of a-c from the transformer or d-c from a local battery. In many mounts, the a-c position is labeled MOTOR GENERATOR and the d-c position is labeled BATTERY. The normal position, which is used if firing is to be controlled remotely by plot or by the director, selects the transformer. The battery supplies firing current in emergency, and can also supply emergency current for lamps illuminating the sight setter's scales and the sight telescope reticles. (The lamps normally get their current from an illumination transformer, not shown in figure 5B19.)

After the firing selector switch come a number of switches or contacts on the mount. The pointer's firing key is generally on one of the elevating handwheels, and is connected to the circuit by a flexible cable. The firing stop mechanism switch is part of the firing stop mechanism (to be described later). It opens the firing circuit when the gun is pointed where it will endanger part of the ship's structure. Some mounts have no interlock switch or relay, but such interlocks are a common feature of mounts with automatic loading equipment or hydraulically operated breech mechanisms. The one shown in the schematic may represent up to six or more, each of which registers that a certain mechanism or part is in a position that is safe for firing. Such electrical interlocks are not limited to automatic mechanisms; even bag guns have such devices to register, for example, that ammunition handling and loading gear is in safe position for firing. The breech-closed contact is a common variety of interlock. In addition (and not shown in the schematic) are the safety devices in breech mechanisms, firing locks, and firing mechanisms, which prevent contact between primer and firing pin when the breech is not fully closed or the gun is not fully in battery.

The last part of the circuit is the firing pin's contact to the electric primer. The circuit is completed through the filament in the primer, the cartridge case, and ground return to the firing transformer or battery.

Note the emphasis on safety in this circuitry. All the switches and keys are in *series*. Any link in the circuit can break the entire circuit if conditions are unsafe at that point. Yet the mount is capable of firing under local control if the remote system has failed.

Firing stop mechanism. At any greater range than point-blank (a range so small that the gun need not be elevated above the line of sight to the target) a gun when correctly laid is aligned with a point other than the target. The greater the range, the greater the deviation. This makes it possible, particularly in enclosed mounts, for a pointer or trainer, looking through a telescope, to see no obstacle in the line of sight, while the gun's bore may be in line with some part of the ship's structure, so that firing the gun will damage the ship.

For this reason measures are taken either to prevent the gun bore from being brought into alignment with the ship's structure, or to prevent it from firing under these conditions. The former method is used on some 20-mm AA mounts, where a large circular cam surrounding the stand prevents depression of the gun barrel below safe limits. And on some carriers there is provision for preventing 5-inch mount power drives from positioning the gun so that its bore axis will be aligned with the ship's structure. But by far the commonest device for preventing this kind of accident is the *firing stop mechanism*, which disables the firing system when the gun is aimed on a bearing or elevation that endangers the ship on which it is mounted.

Figure 5B20 shows the fundamental mechanism used in all mounts larger than 20-mm. It is essentially a disc-type cam, in which the inputs are gun train (which rotates the cam) and gun elevation (which moves the cam follower approximately radially across the cam). A spur gear driven by the mount training gear engages the radial gear teeth around the circumference of the cam plate or disc. The elevation input shaft moves toward the center of the cam plate when the gun elevates, and toward the edge of the cam plate when it depresses. At the end of the elevation input shaft is a spring-loaded plunger which maintains contact with the cam plate.

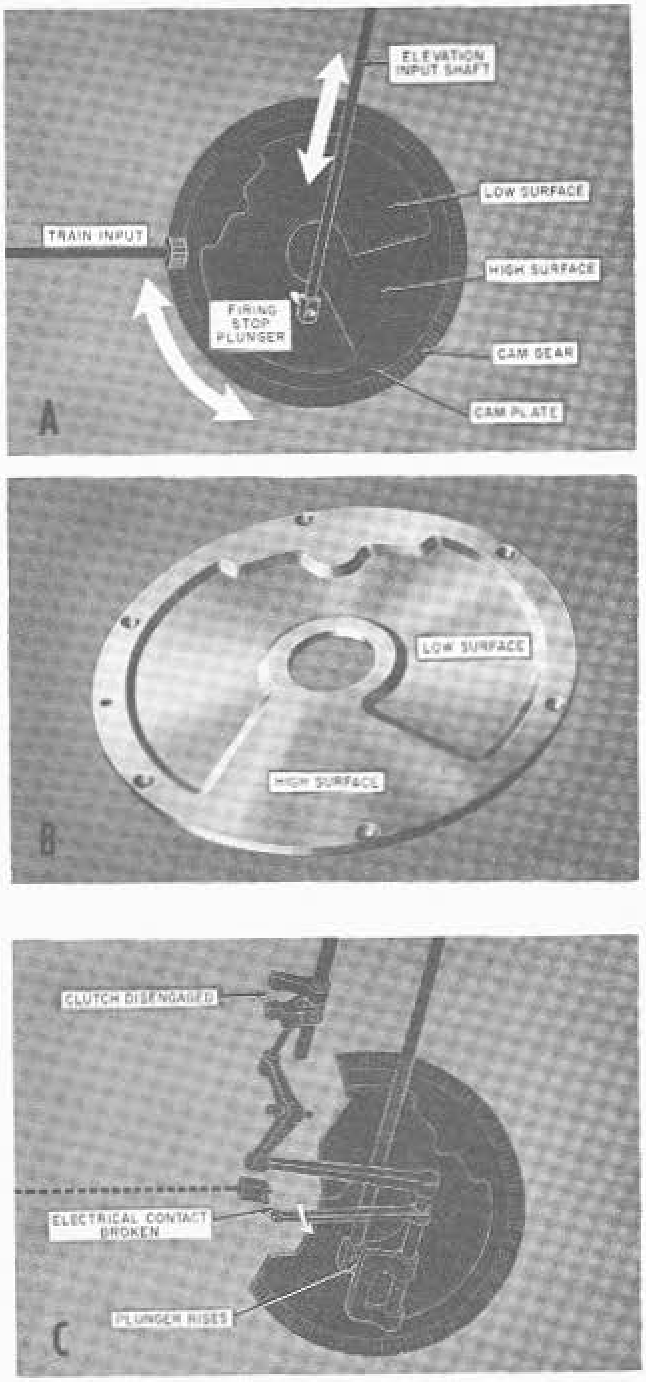

FIGURE 5B20.—Principle of firing stop mechanism. A. Mechanical inputs. B. Cam plate. C. How fire is interrupted.

When the gun mount is installed, the axis of its bore is observed through all angles of train and elevation. Each position of the gun (as defined by its train and elevation) corresponds to a location of the plunger on the cam plate. The angles of elevation and train at which the gun endangers parts of the ship's structure are plotted on a special diagram that corresponds to the cam area. Then the cam plate surface is machined. The surface is cut so that safe areas are depressed, while danger areas remain the original surface of the plate.

Thus, when the gun is positioned at angles of train and elevation where it is safe to fire, the plunger rides on the depressed surface of the cam plate. As soon as the gun trains or elevates to a bearing or elevation which aligns the bore with any part of the ship's structure, the plunger rides on the uncut surface of the cam plate.

Plunger movement, as the plunger rides up to the uncut surface or down to the depressed surface of the cam, is communicated by a mechanical linkage to a *clutch* and to a *switch*. As figure 5B20 shows, the clutch is in the mechanical linkage of the percussion firing system. (The clutch is also shown (encircled) in figure 5B17.) The switch is in the electrical firing circuit. When the plunger is riding on a high (danger) cam plate area, the clutch is disengaged, interrupting percussion fire, and the switch is opened, interrupting electrical fire. When the plunger is riding on a low (safe) cam plate area, the clutch is engaged and the switch is closed, permitting fire.

Firing stop mechanism functioning is completely automatic. It requires no attention from the gun crew after installation, beyond periodic maintenance checking to see that it is functioning properly and requires no adjustment. Only if the mount location or ship's structure is changed is it necessary to revise the cam plate. In this case, the cam plate is replaced by one cut to a new pattern.

Firing stop mechanisms on turrets function only to interrupt the electrical firing circuit. (There is, obviously, no way to interrupt the percussion firing linkage, since the only connection between the firing lock and the individual firing the gun by percussion is a lanyard.) Therefore an indicator lamp for each gun shows whether or not the gun is positioned on a safe bearing and elevation.

5B6. Recoil and counterrecoil systems.

Novels about life aboard naval vessels of a hundred years ago or more, frequently have at least one scene in which a naval gun mount breaks loose—either in battle, during a storm, or both—and thunders, an uncontrollable Juggernaut, across the deck as the ship rolls in heavy seas. This is something that can scarcely happen aboard a modern naval vessel; other gear may break loose, but it is hard to see how a gun mount can. Why were not the guns in the days of sailing vessels simply secured to a fixed mounting, as guns are today?

The answer is that modern guns have recoil and counterrecoil mechanisms, and ancient guns did not. A naval gun can be rigidly secured to the deck, but without some provision for its recoil it will break loose when fired.

Recoil is simply the manifestation of the third of Newton's three laws of motion—the one that says, with deceptive brevity: "To every action there must be an equal and opposite reaction." The enormous thrust that can send a ton of steel screaming at supersonic speed toward a target over 20 miles away acts not only on the projectile, but on the gun. Yet, though the recoil of a full broadside salvo on a BB will push it sideways like a piece of driftwood, the guns themselves do not break loose and roll threateningly across the deck. Why?

The answer, again, is that these guns have recoil and counterrecoil mechanisms.

The antique naval gun was fired from "battery" position—with the mount pushed as far outboard through the gun port as the bulkhead would permit. Its recoil hurled it inboard, rolling on its wheels until it brought up against its stout tackle. In this "recoil" position, well back of the gun port, the bore could be swabbed, and the powder and ball loaded for the next shot. Then the crew hauled it up to battery position, and lit off the primer to fire again.

Thus in naval guns the entire gun carriage, or what we would now call the mount, was rolled backward in recoil and forward (manually) in counterrecoil. Artillery ashore did this too; the classic example (1904) is the Russian gunners fighting up a hill at Port Arthur—firing, then chasing madly down the hill after their runaway pieces, and laboriously hauling them up the hill again (if they could get them up) for the next round.

As naval gun mounts evolved, control over recoil improved. Engravings of the interior of post-Civil War monitors (early descendants of the Union's pioneer armored and turret-equipped war vessel) show tracks on which the great guns recoiled when fired. But it wasn't until shortly before World War I that effective recoil brakes and counterrecoil mechanisms were developed. These were, for the time, triumphs of metalworking accuracy and engineering ingenuity, and were treated as military secrets, much as a new type of radar application or atomic bomb trigger mechanism is treated today.

There are a number of different types of recoil brakes and counterrecoil mechanisms that have been found efficient in land artillery and elsewhere, but the United States Navy uses in naval gun mounts but 1 general type of recoil brake (in either of 2 variants) and but 2 kinds of counterrecoil mechanism. But before considering these, note the general functions of these devices:

1. A recoil brake is primarily designed to absorb the force of recoil and "spread" it so that the sudden heavy shock is converted to a thrust exerted over an appreciable distance through which the recoiling parts of the gun are permitted to move. In the mechanical sense, work is done by the recoil force in pushing the gun and housing aft against the resistance of the recoil brake; the energy absorbed in the brake appears as heat.

    a. A secondary function of all recoil brakes in naval gun mounts is to bring to a smooth stop by dashpot action the forward movement (counterrecoil) that follows recoil.

2. A counterrecoil mechanism is a device that stores some of the energy of recoil and uses it to force the recoiling parts forward into battery after the projectile has left the gun muzzle. (The energy of recoil can, of course, be traced ultimately to the combustion of the propellant.)

Recoil and counterrecoil mechanisms are designed to work together. Figure 5B21 shows in a general way where the recoil and counterrecoil systems are located in a conventional 5-inch mount.

Recoil systems. All present-day recoil systems for naval guns larger than 20-mm use hydraulic recoil brakes. A hydraulic recoil brake is a mechanism of the type commonly termed by engineers a "dashpot." It has a piston and a cylinder which can move with respect one to the other. There is a liquid in the cylinder which can move from one side of the piston to the other, but its rate of movement is restricted or "throttled."

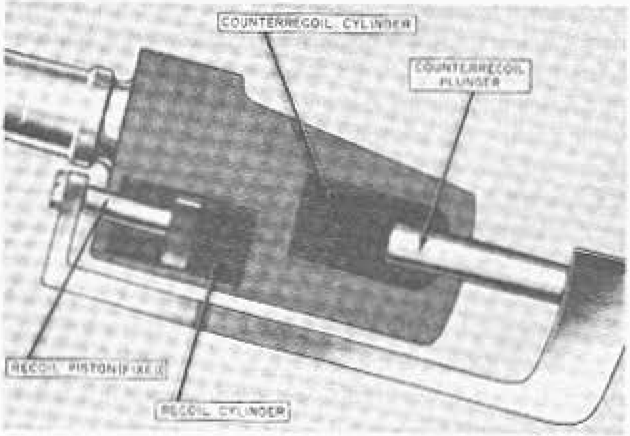

Figure 5B21.—Recoil and counterrecoil systems in a conventional 5-inch mount.

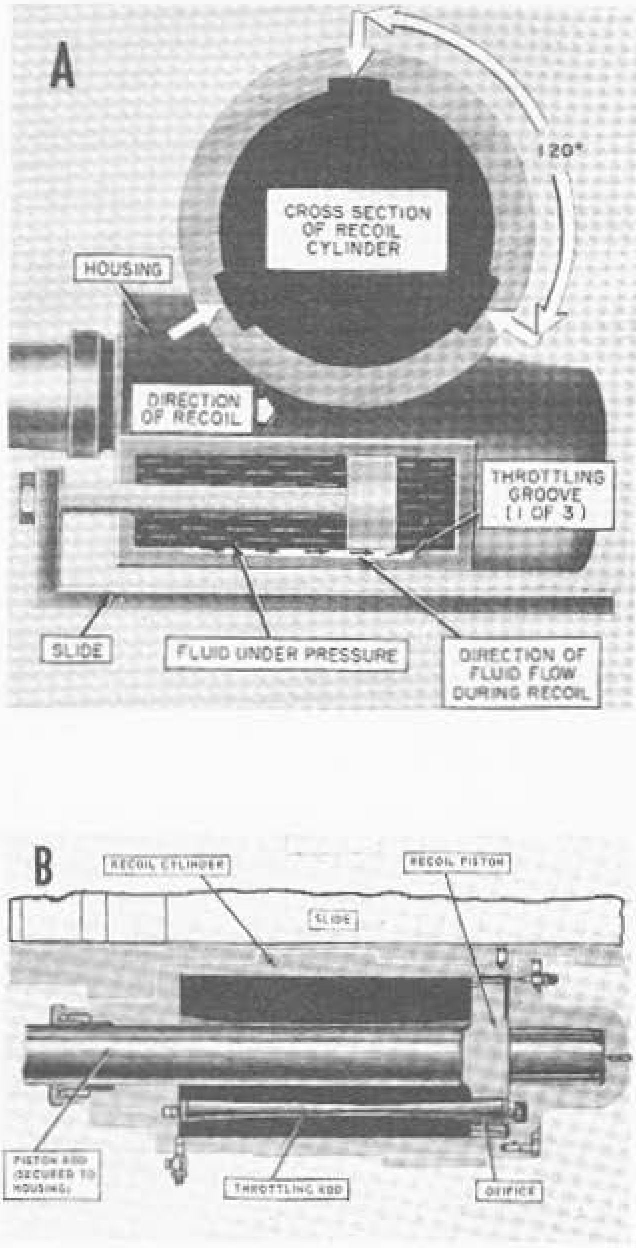

Figure 5B22.—Hydraulic recoil brakes. A. Throttling-groove type. B. Throttling-rod type.

The two general variants of this type of device are shown in figure 5B22. In one variant (A in the figure), the piston is solid, and each cylinder is filled with recoil fluid (usually a mixture of water with glycerin). In the wall or liner of each cylinder are cut three throttling grooves 120 degrees apart. They are shallow at the forward end of the cylinder and deepen toward the after end.

When the gun is fired, the force of recoil pushes the housing and the recoil cylinders within it to the rear, thus exerting pressure on the fluid in the forward end of the cylinder.

But the throttling grooves permit the fluid to flow around the piston at a reduced or throttled rate. The cylinder can, therefore, yield to recoil thrust and move aft, subject to the continuous braking action of the hydraulic fluid as it flows through the grooves from the forward end of the cylinder to the rear. Since the recoil fluid can flow only at a rate proportional to the size of the throttling grooves, the recoil brake resists the force of recoil over its entire stroke.

In effect the recoil brake, by distributing the force of recoil over the length of the recoil stroke, converts this force from a sudden, destructive impact to a still-powerful, but controllable, thrust exerted over a considerable distance.

Note that the grooves are TAPERED. (In the figure, in order to show this more clearly, both the taper and the size of the groove are exaggerated.) At the beginning of the stroke the grooves are comparatively deep, so that the fluid will not offer too much resistance to the initial thrust of recoil. As the housing moves aft, the grooves become shallower, until by the end of the recoil stroke the grooves are very shallow indeed. By this time the force of recoil is spent, and, by throttling the fluid flow down, the shallow grooves help to bring the housing to a smooth stop.

In the conventional 5-inch gun there are two recoil cylinders of this kind, symmetrically arranged about the long axis of the housing. Since the cylinders are bores in the housing, in this design the cylinders move in recoil while the pistons are fixed to the slide by the piston rods. A transverse bore in the housing, called the *equalizer hole,* permits enough fluid flow between cylinders to equalize the pressures built up and the resistance offered by the two cylinders to recoil movement.

In other designs, there may be but 1 recoil cylinder, or 2 cylinders may be arranged asymmetrically. Or the recoil cylinder may be in the slide, while the recoil piston rod is secured to the housing. All of these variations on this type of recoil brake can be found in United States naval gun mounts.

The other major variant in recoil brakes is in guns 6-inch and larger. This kind of recoil brake has a somewhat different method of controlling recoil fluid flow. Instead of being solid, the piston has 3 holes bored in it, spaced 120 degrees apart. Through each of the holes passes a tapered *throttling rod* secured to the ends of the recoil cylinder so that it is parallel to the piston rod. (For simplicity's sake, only one throttling rod and hole are shown in figure 5B22.) There are no throttling grooves.

As the piston moves in recoil, the fluid that it displaces can flow from one end of the cylinder to the other only through the holes. Because the throttling rod varies in diameter at different points, it blocks off a varying portion of the hole as the piston moves in its stroke. Where the rod's diameter is large, for instance, it blocks off most of the hole, leaving only a small opening for fluid flow, and the braking effect is large. Where the rod is small, on the other hand, less of the opening is blocked, and more fluid can pass, with decreased braking effect. The rods are so tapered as to provide evenly distributed resistance to recoil thrust over the length of the recoil stroke.

One advantage in the use of throttling rods is that the rods can be replaced with others of different taper if a change in the gun's recoil characteristics is desired.

All recoil systems used in United States naval guns incorporate a *counterrecoil buffer* dashpot mechanism used in bringing counterrecoiling parts to a smooth stop. This is discussed further in connection with counterrecoil systems.

Counterrecoil systems. There are 2 basic types of counterrecoil systems (also called *recuperator*) used in United States naval guns. Guns smaller than 5-inch use 1 or more *counterrecoil springs.* (These are sometimes termed *recoil springs* in OP's and elsewhere, but the function is the same.) Guns 5-inch and larger use pneumatic recuperators, which depend on compressed gas (generally air or nitrogen) to provide counterrecoil thrust. Since the very high-pressure gas used in such systems is sealed by use of packings under hydraulic pressure, such systems are most often called *hydropneumatic counterrecoil systems.*

The functions of any counterrecoil system are primarily to return the recoiling parts of the gun to battery after the recoil stroke, and secondarily to hold the recoiling parts in battery. Thus a counterrecoil system must not only provide thrust to return the recoiling parts to battery, but must also develop enough *continuous* thrust at all times to hold them there except while the projectile is actually being propelled through the bore. This is in contrast with recoil brakes, which develop their "reverse thrust" for braking only while the recoiling parts are actually moving in recoil, and at other times exert no forces on the gun parts.

Because it continues to develop a heavy forward thrust "following through" to the end of the counterrecoil stroke, any counterrecoil system tends to drive the recoiling parts into battery with considerable shock. For this reason, all counterrecoil systems for guns with massive recoiling parts (which include guns 40-mm and up) must have a *counterrecoil buffer* to take up this terminal shock. Counterrecoil buffers are discussed in further detail below.

Spring counterrecoil systems. In all naval guns

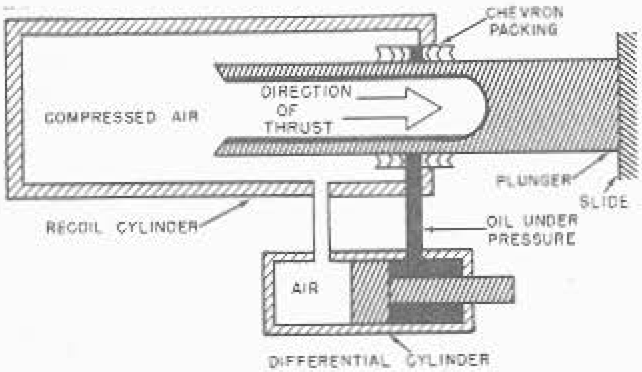

FIGURE 5B23.—Hydropneumatic counterrecoil system. (Simplified schematic.)

smaller than 5-inch, coil springs provide counterrecoil thrust. In late 3"/50 mounts and most 40-mm mounts, the springs surround the exterior of the barrel (water jacket in 40-mm mounts). In single Army-type 40-mm mounts and in some earlier marks of 3"/50 hand-loaded mounts the springs are concealed; in some 3-inch mounts they may be the recoil cylinder.

Hydropneumatic counterrecoil systems. Figure 5B23 shows in simplified form how a pneumatic counterrecoil system works. It requires a cylinder or bore (in the housing) charged with gas (generally nitrogen or air, never oxygen or other chemically active gas). Gas pressure in a conventional 5-inch system (which is typical) is around 1,500 psi. A plunger fitting into the after end of the housing is forced outward (to the rear) by the gas pressure against the after end of the slide. The thrust exerted by the plunger against the slide holds the housing in battery and returns it to battery after firing.

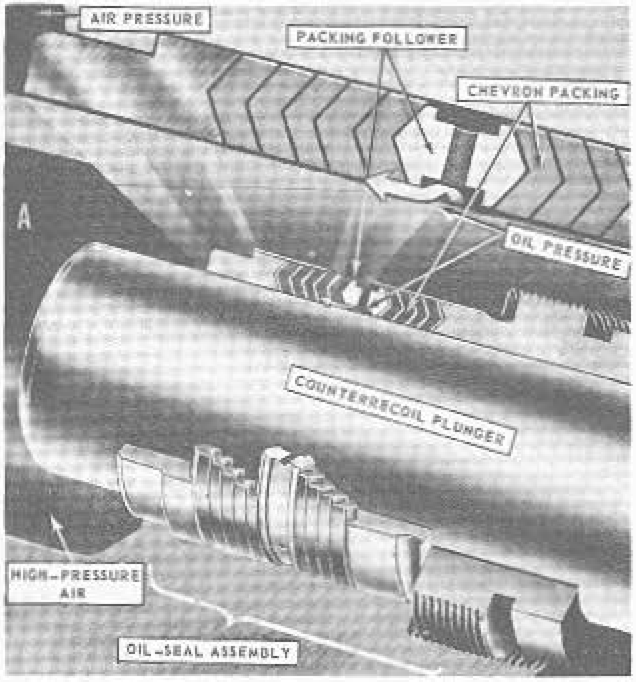

FIGURE 5B24.—Hydropneumatic counterrecoil system. Detail of oil-pressure type chevron packing.

The complication of this arrangement lies in the packing which surrounds the plunger in the housing. Ordinary packing, unsupported, will not withstand the gas pressure in the counterrecoil chamber. Therefore the packing used is a *chevron* type "inflated" by oil under pressure. (Figure 5B24.) The oil pressure in the packing is always higher than that of the gas in the cylinder. Figure 5B25 shows functionally the device that ensures this pressure relationship—the *differential cylinder.*

One end of the differential cylinder (to the left in figure 5B25) is connected to the air chamber. The other (right end in figure 5B25) is connected to the oil-charged packing, and is full of oil. The piston is free-floating, and the piston rod on the oil side goes through a packing gland to the outside, but does not connect mechanically to any other component.

The values for dimensions and pressures shown in the figure and in the discussion below are not intended to represent any specific installation, but serve only to illustrate the principle of the differential cylinder. Suppose the total area of either face of the piston is 3 square inches, but the cross-section area of the piston rod is 1 square inch. The air pressure of 1,500 psi is exerted on the full piston area of 3 square inches, and the total thrust or force developed is 3 x 1,500 or 4,500 lbs.

But on the other side of the piston only 2 square inches are exposed to oil pressure, since 1 square inch is occupied by the piston rod. (For the sake of simplicity, atmospheric pressure on the outside end of the rod is neglected in this example.) The oil is therefore subjected to a thrust of 4,500 lbs. exerted on a 2-square inch area. Hence it is under a pressure of 2,250 psi, which is higher than that of the air (1,500 psi). The pressure is communicated to the packing.

It is obvious that even though the air pressure fluctuates, the pressure relationship will remain the same (in the ratio, oil to air, of 3:2), so that the packing will always be under higher pressure than the air.

The differential cylinder serves not only as a device to maintain pressure in the packing, but also as an indicator of oil level in the sealing system. When the differential cylinder is fully charged with oil, the plunger is flush with the end of the cylinder. If oil leaks out, the piston is driven farther to the oil side (to the right in figure 5B25). Gun mount maintenance personnel are supposed to inspect the cylinder daily,

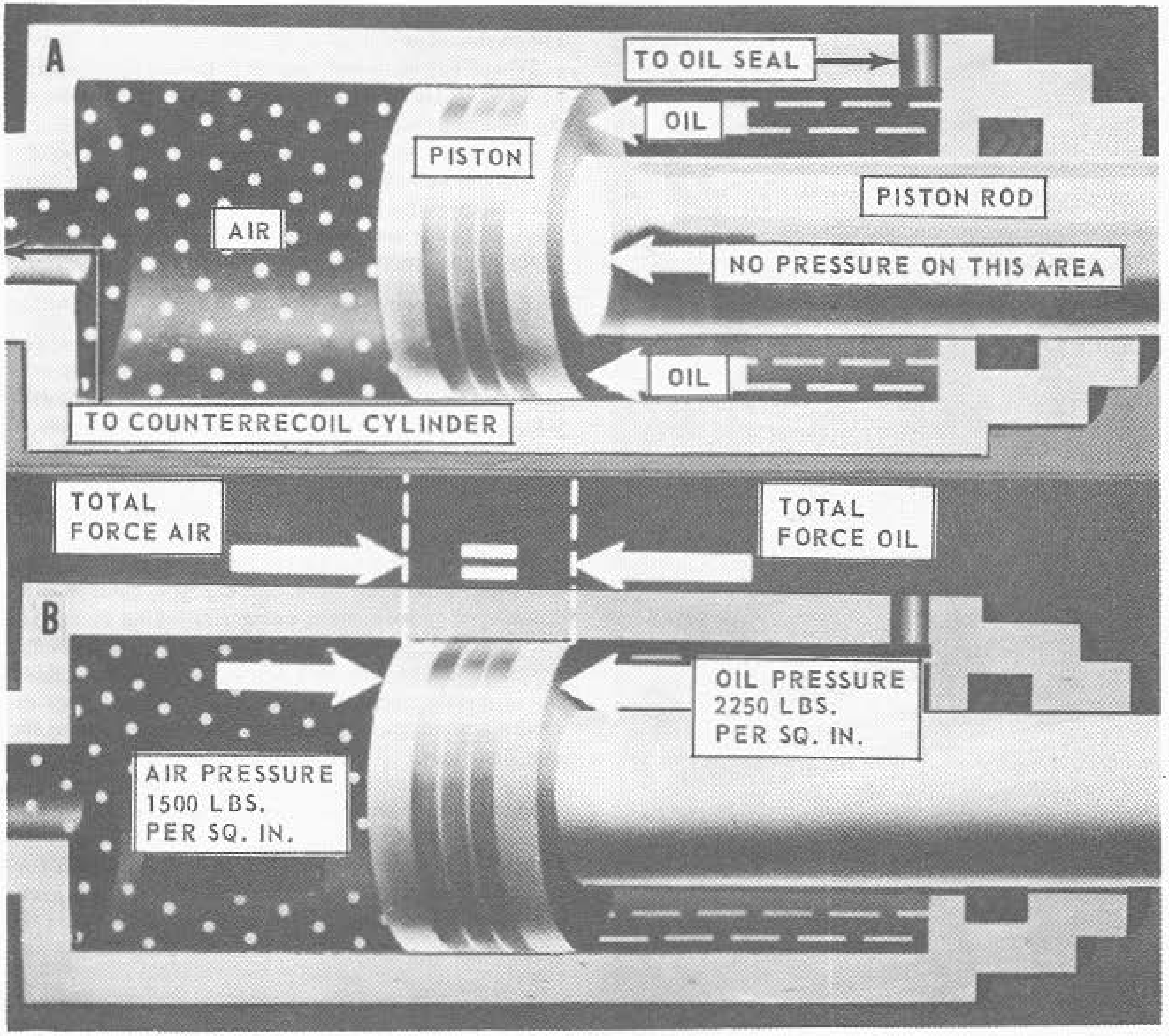

Figure 5B25.—Hydropneumatic counterrecoil system. Principle of differential cylinder.

and to see that oil is pumped in if the piston rod protrudes more than 2 inches.

Counterrecoil buffers. It was brought out earlier that any counterrecoil system must develop enough thrust to hold the recoiling parts in battery, and that in guns whose recoiling parts have appreciable mass the shock at the end of the counterrecoil stroke can be considerable. Counterrecoil buffers must consequently be incorporated into the gun mount to reduce this shock. These are not physically part of the counterrecoil system components described above; in present designs, they are located in the forward end of the recoil cylinders.

Counterrecoil buffers are dashpot devices which use oil forced through small orifices to reduce the velocity of counterrecoiling parts at the end of the counterrecoil stroke. A typical design (similar to that in 5-inch guns) is shown in figure 5B26 (left), in three stages of operation. As counterrecoil movement begins, the housing and recoil cylinder move forward over the recoil piston. The buffer plunger, which closes off the after end of the recoil cylinder, is aligned to enter a hole in the recoil piston and piston rod. As the plunger enters the hole in the piston, the fluid caught therein is trapped, and can escape only through small passages in the plunger. At the end of the counterrecoil stroke (full battery position), the plunger is entirely nested within the recoil piston and piston rod.

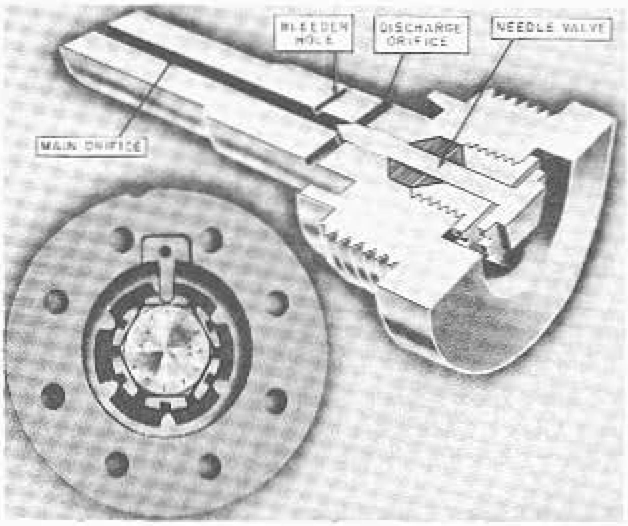

FIGURE 5B26.—Counterrecoil buffer functioning.

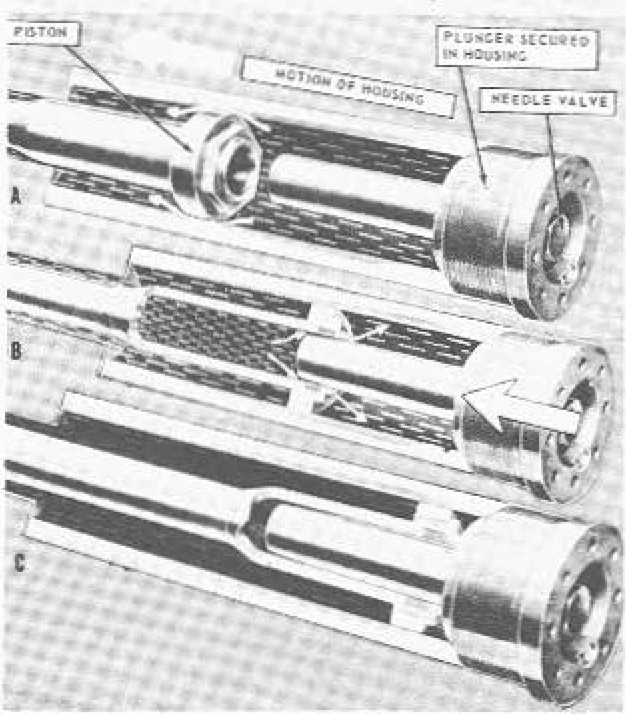

FIGURE 5B26.—(Continued.) Needle valve control.

As is evident from figure 5B26, the flow of fluid through the counterrecoil buffer plunger is controlled by a *needle valve*. This valve can be set by moving a calibrated nut in the recoil cylinder head. (Figure 5B26, right.) By controlling the flow of the liquid through the discharge orifices or holes, the needle valve controls the speed of counterrecoil. The numbering on the calibrated valve nut makes it possible to set both buffers for equal, balanced functioning. For the proper procedure in setting these valves, see the OP on the mount.

Where (as on 5-inch mounts) there are two recoil cylinders, each with a buffer, the valves must be set for balanced functioning.

Note that the counterrecoil buffer regulates only the *end* of counterrecoil movement. This provides some control over the rate of fire of automatically loaded guns, but does not regulate the recoil stroke or most of the counterrecoil stroke.

5B7. Power rammers and mechanical ammunition feed

The effectiveness of a gun per round fired is concerned with such factors as range, efficiency of propellant, accuracy of fire, weight and initial velocity of projectile, explosive filler of the projectile, and the like. But the effectiveness of a gun as a weapon depends on the number of rounds per minute it can put into the target.

It is here that mechanical loading and feeding devices are important. For convenience, these can be considered in two main categories. One is that of *hoists*, which are used to lift ammunition from the magazine to the gun deck level. These will be taken up in a subsequent article. The other category includes ammunition feeding and loading devices at the gun deck level. These include power rammers, slide-mounted ammunition loading gear, and equipment used to transfer ammunition from the hoist to the gun slide.

In 5-inch mounts through Mark 39, in 6-inch turrets of *Cleveland* class cruisers and in bag gun turrets, separate *power rammers* are used for moving into the gun chamber ammunition which has been loaded into the slide.

Figure 5B27 shows a slide-mounted rammer on a 5-inch mount. Here a piston in a long-hydraulic cylinder operates a reciprocating rubber-faced *rammer*

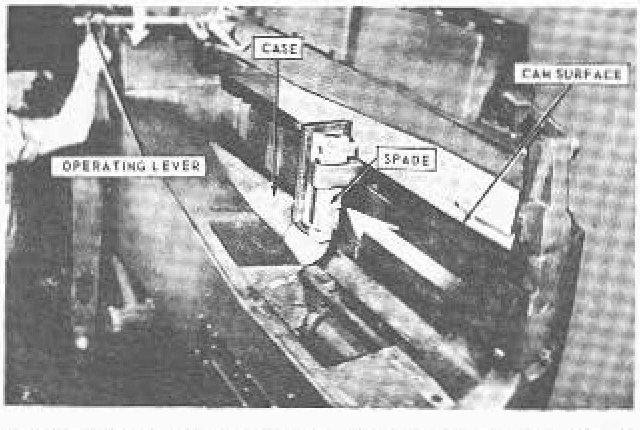

FIGURE 5B27.—Slide-mounted power rammer in 5-inch mount. Initiating ram stroke.

spade or *shell guard*. The rammer is controlled by a rammer man. When a projectile and powder case have been deposited in the gun slide loading tray by the loaders, the rammerman depresses a lever on the rammer control rod. The rammer hydraulic cylinder, fed by a motor-driven pump on the slide, drives the piston, piston rod, and rammer spade forward, pushing the round into the chamber. When the cartridge case is in the chamber, it automatically releases the breech mechanism (as has been described earlier in this chapter) and the breechblock rises. When the gun fires, the rammer spade rides backward with the housing; this automatically (through mechanical linkage to a control valve) initiates the rammer retract stroke. The rearward-moving spade rides a camming groove in the slide which raises it well above the loading tray, so that it offers no obstruction to the extraction of the fired cartridge case. The spade is dropped to ram position manually. Except for this operation and for initiating the ram stroke, all rammer operations on this type of mount are automatic.

This rammer arrangement is used in all 5″/38 mounts and in the 5″/54 Mark 39. The only notable difference among them is that in enclosed mounts the rammer hydraulic cylinder is shortened and a rack-and-pinion arrangement is used to make the stroke of the rammer space the proper length for ramming.

The rammer in the 6-inch *Cleveland* class mount is of a similar type.

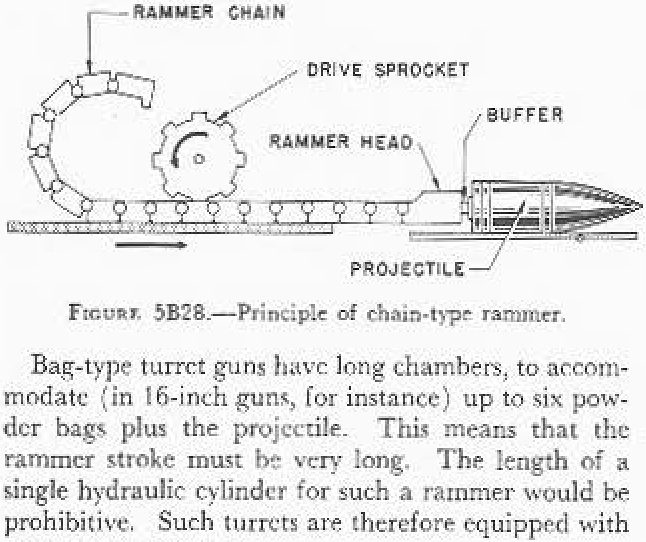

FIGURE 5B28.—Principle of chain-type rammer.

Bag-type turret guns have long chambers, to accommodate (in 16-inch guns, for instance) up to six powder bags plus the projectile. This means that the rammer stroke must be very long. The length of a single hydraulic cylinder for such a rammer would be prohibitive. Such turrets are therefore equipped with *chain-type* rammers.

Although the details of operation differ from one type of bag turret to another, all of them work on the principle illustrated in figure 5B28. A rotary hydraulic motor drives a sprocket which engages the links in a *rammer chain*. This is somewhat like an exaggerated bicycle chain, except that the straight chain will bend in only one direction (in the figure, upward only), and is stiff in the other. As the figure shows, in the type illustrated the links will remain straight without continuous support when extended horizontally.

At the end of the chain is a buffer to protect the ammunition component being rammed. In bag-gun turret installations, the rammer operation is always under manual control, generally by regulating pump output to the hydraulic motor that drives the chain. The ramming operation requires two ramming strokes. In the first, the projectile is rammed home in a full maximum-thrust stroke, to ensure that the rotating band engages the rifling. Then the rammer is retracted, and the powder bags are rammed much less forcibly in a second stroke. After the second retraction the breech can be closed. Two strokes are necessary because the maximum-thrust stroke needed for the projectile would damage the powder bags. (The 5-inch rammer discussed previously is used with propelling charges housed in sturdy cartridge cases, so only one ram stroke is needed.)

Newer designs of 3-inch mounts, 6-inch turrets, and 8-inch turrets all include a great deal of almost entirely automatic ammunition-handling gear. In the turrets, this equipment transfers the ammunition from the hoist to the slide (except that in the 6-inch design the projectiles must be manhandled through this stage), rams it into the chamber, and then disposes of the empty cartridge cases after firing. In the 3-inch gun, as in 20-mm and 40-mm machine guns, the ammunition is loaded manually into a loading device on the slide of the gun, and the ammunition is handled automatically from that point.

But notice the distinction between 3-inch and larger ammunition-handling machinery, and that in true machine guns like the 20-mm and the 40-mm. In the latter, the ammunition-handling gear is operated by energy developed ultimately in the burning of the propelling charge. In the former, the ammunition-handling gear, though some operations are controlled by recoil and counterrecoil movements, is powered by an external source. In the 3-inch mount, the loader mounted on the slide of each gun is powered by an electric motor. In the turrets, the automatic loading equipment is driven by electrohydraulic gear.

Because each type of mount or turret has its own design of ammunition-handling equipment, these units are described in further detail later in this textbook, each in connection with the mount of which it forms a part.

5B8. Power-driven ammunition hoists

One of the earliest operations to be mechanized in connection with gun operations on naval war vessels was that of ammunition transportation. In the classic warship of Nelson's day, black-powder propelling charges were stowed in magazines below the waterline, and were brought up to the gun decks by agile runners. Even with the slow rate of fire characteristic of contemporary cannon, there must have been delays and traffic jams in ships of the line of 80 guns or more, as runners scurried below to fetch their charges, then climbed up to the gun deck, the precious (and dangerous) charges guarded against sparks by being wrapped in the sailors' shirts.

One of the forerunners of modern shipboard ammunition supply systems was the mechanical hoist arrangement on the *Monitor*, which pioneered in naval warfare in so many other ways.

Ammunition supply systems. Figure 5B29 shows in cutaway form the ammunition supply arrangements for a modern 5-inch twin mount. At the lowest level is the *magazine*, in which are stacked the propelling charges. The magazine partly surrounds the *lower handling room*, which is separated by a flameproof

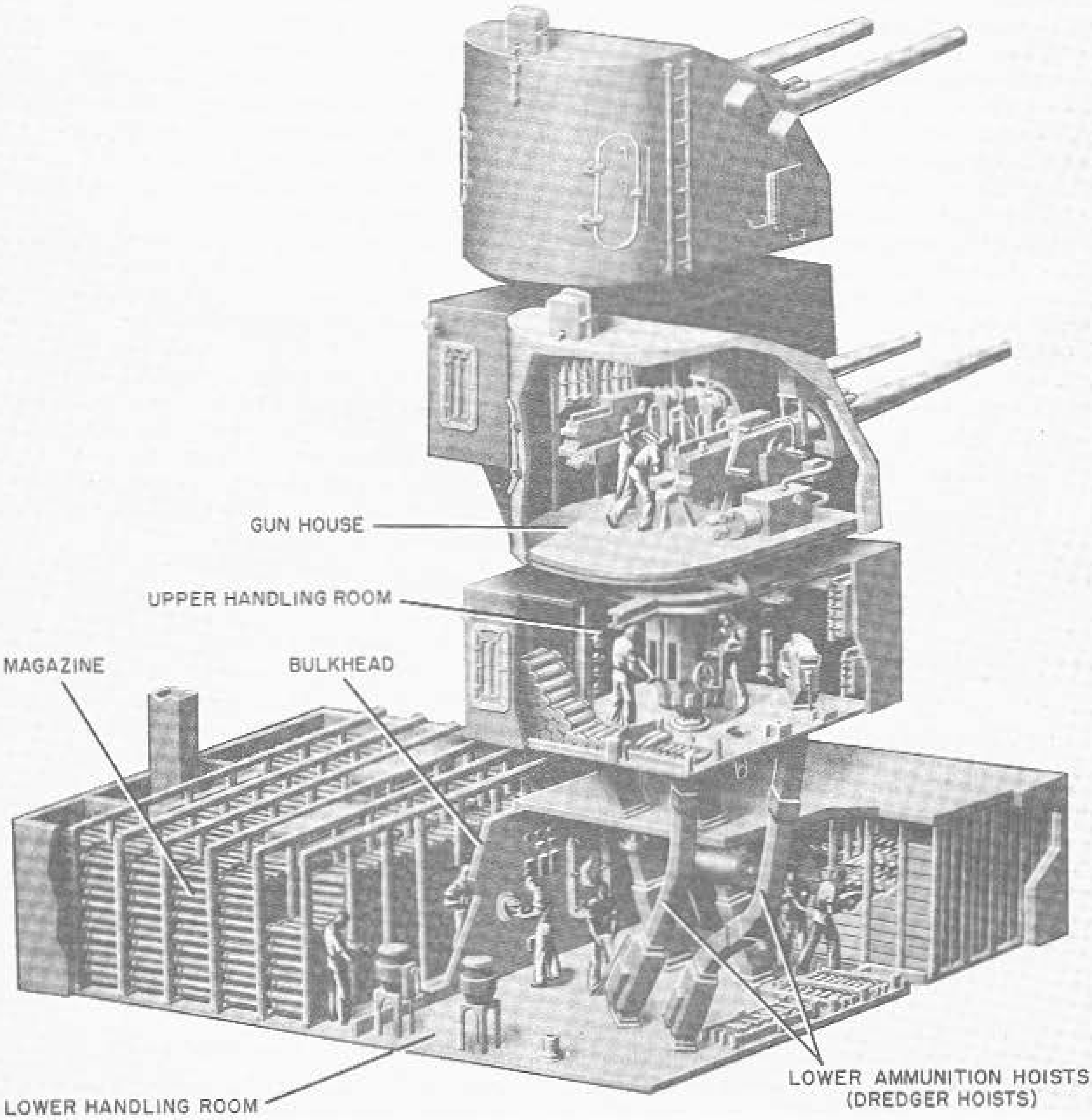

FIGURE 5B29.—Ammunition supply system for 5"/38 twin mount.

bulkhead from the magazine. Powder cases, which are stored in the magazine, are passed by hand through scuttles in the magazine bulkhead to the lower handling room. (Projectiles are normally stored in the lower handling room itself, in racks in the upper handling room, and on the gun-house bulkheads.)

The powder cases and projectiles are then loaded into the 2 *dredger hoists* (1 for each of the 2 guns in the mount) which haul them up to the *upper handling room*. Each dredger hoist handles both projectiles and powder cases.

On the upper handling room deck are located the upper ends of the 2 dredger hoists, and around the central column in the room are mounted the 2 sets of *projectile hoists* and *powder hoists*, 1 projectile hoist and 1 powder hoist for each gun. The handling room crew removes the projectiles and powder cases from the dredger hoists, loads the projectiles into the projectile hoists, and loads the powder cases into the powder hoists. In 5-inch hoists powder cases are loaded into the hoist base up to protect the impact-sensitive combination primer from being jarred by jolts on the base of the case. Five-inch projectiles also go into their hoists base up, so that their noses will rest in the hoist fuze-setting mechanism.

Most of the propelling charges are stored in the magazine, and most of the projectiles are stored in the lower handling room. To begin ammunition service without delay, a number of complete rounds are maintained in ready racks in the upper handling room. For long periods of sustained fire, however, the entire ammunition supply system must be in action.

With smaller mounts like the 3"/50, 40-mm, and 20-mm, hoists are relatively unimportant. Generally their ammunition is stowed in ready-service lockers nearby, and is hand carried to the mounts, though hoists may be used (depending on the installation) to replenish supplies. In turrets, the entire ammunition supply system, except the magazines themselves, is inside the turret and rotates with it.

Types of hoists. All gun ammunition hoists on modern United States naval vessels can be classified into one of the following categories:

1. Endless-chain.
   a. Hoist-or-lower multistage.
   b. Hoist-only single-stage.
2. Elevator.
3. Pawl.
4. Open-tube.

The most widely used is the first class (in its two subtypes). The other 3 are used exclusively in turrets (though at least 1 rocket mount design employs No. 3). No. 4 is an auxiliary.

Endless-chain hoist-or-lower multistage hoist. This is the commonest type of hoist, and includes all dredger hoists, conventional 5-inch powder hoists, and a number of others used in turrets and elsewhere. Fundamentally, it consists of an articulated endless chain with supports or *flights* secured to it at regular intervals (fig. 5B30). Powder cases or projectiles are loaded by pushing them into the hoist in the path of the flights; when the hoist starts, the chain is driven upward until the next vacant flight is in loading position. When the next unit is loaded, the hoist goes up one more flight, and so on. Except in certain turrets, the hoist starts automatically when the ammunition detail is loaded, actuating a switch or hydraulic valve. Endless-chain hoists are driven by rotary hydraulic motors whose functioning is controlled by valves.

Endless-chain hoists generally can be operated in reverse to lower ammunition units, as is required in taking ammunition aboard. In either mode of operation, the hoist moves one flight at a time, inter-

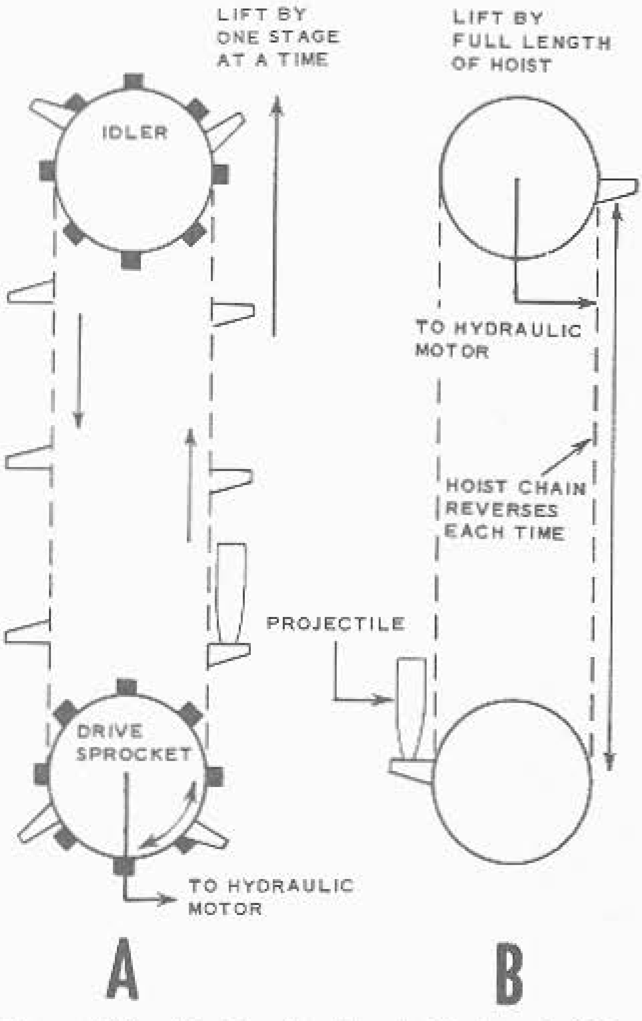

FIGURE 5B30.—Principles of endless-chain hoists. A. Hoist-or-lower multistage. B. Hoist-only single-stage.

mittently in the same direction. Only one side of the chain is used.

Endless-chain hoist-only single-stage hoists. Like the preceding type, this hoist is an endless chain driven by a rotary hydraulic motor. It is used in 5″/38 and 5″/54 (Mark 39 only) mounts, and incorporates a fuze setter (described in a later chapter). Both sides of the chain are used (fig. 5B30). There are 2 flights, arranged so that when one is at the top of the hoist on one side, the other is at the bottom of the hoist on the other. The chain runs first in one direction, then the other, and the flights always move from all the way at the top to all the way at the bottom (or vice versa). The arrangement is similar to that of the old-time well with 2 old oaken buckets, one of which descended while the other went up.

The projectile is loaded into one side, and automatically the hoist starts if the top is empty. As the loaded flight ascends, the empty comes down. The cycle reverses for the next projectile.

This type of hoist can be used for hoisting only. It is not safe to attempt to lower projectiles in it.

Elevator-type hoists. This kind of hoist is a single-stage system with a car which is moved up or down a hoistway. The car is secured to a hydraulically operated system of cables—a *hoisting cable* and a *downhaul cable.* Both are always in tension, and provide positive control of the car position. Unlike conventional elevators ashore, the car has no counterweight.

The principal application for hoists of this type is to haul powder in bag-type turrets. Although protected by interlocks, such hoists are generally manually controlled. All loading and unloading points in such installations are protected by interlocked flametight doors.

In 8-inch bag-type turrets (*Baltimore* class), there are two sets of elevators. One set hoists the powder bags to an intermediate flametight compartment where they are manually transferred to a second set, in which the bags are hoisted the rest of the way to the gun deck level. In the transfer compartment interlocks prevent the protective flametight doors of the lower hoist upper end from being open at the same time as the doors of the upper hoist lower end. This arrangement avoids the possibility of having a straight path open to flame from the gun deck level to the magazine level.

In 16-inch turrets a single elevator-type powder hoist serves each gun, but operating procedures provide for opening the hoist upper doors only when conditions in the gun compartment are safe.

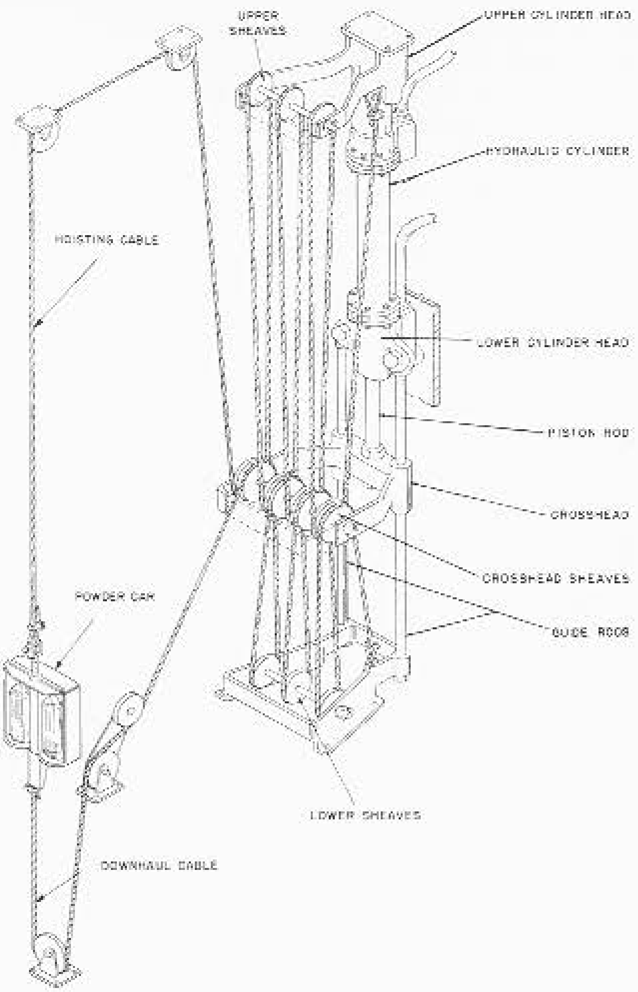

FIGURE 5B31.—Schematic of car hoisting machine (lower powder hoist) in 8-inch *Baltimore class turret.*

Pawl-type hoists. In this type of hoist the hoist tube is equipped with a set of spring-loaded pawls a given distance (one "stage") apart. The pawls protrude into the hoistway. Running the length of the hoistway is a jointed *rod,* or *rack,* similarly equipped with spring-loaded pawls one stage apart. The rod can be hoisted one stage by a hydraulic cylinder, then lowered back to starting position. This type of hoist is used for hoisting projectiles in 8-inch and 16-inch bag turrets, and in one rocket mount for hoisting rockets.

The operating cycle is as follows:

1. A projectile is loaded at the lowest level. It is supported by the hoistway (stationary) pawl.
2. The hoist cylinder pushes the hoist rod upward one stage. At the beginning of the upward stroke, the lowest rod pawl engages the projectile base, and lifts it. The end of the upward stroke is just above the next hoistway (stationary) pawl.
3. Next, the rod is lowered back to starting position. The projectile is deposited on the hoistway pawl just below it. Another projectile can now be loaded into the first (lowest) stage.

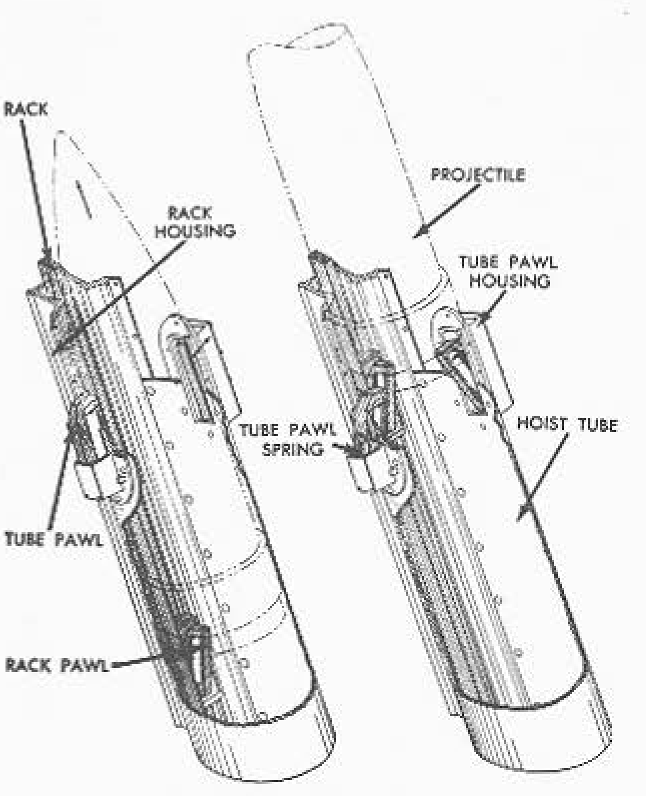

A. RACK PAWL HOISTING PROJECTILE -TUBE PAWLS DEPRESSED

B. HOISTING STAGE COMPLETED -TUBE PAWLS IN POSITION TO SUPPORT PROJECTILE

FIGURE 5B32.—Principle of pawl-type hoist.

4. At the next upward stroke of the rod, the next higher rod pawl engages the projectile, and raises it another stage, where it can be supported by the next higher hoistway pawl.

The process repeats until the projectile is at the top of the hoist. It must be removed (by loading into the gun) before another cycle can begin.

Open-tube hoists. This kind of hoist is a simple open tube connecting one level of a bag-type turret with the next higher or lower level. Secured to the overhead above the tube is a small motor-driven hoist equipped with block and tackle, or with internal gearing and hoist chain. Normally the tube is closed by a flametight cap. The arrangement is used for hoisting or lowering projectiles when taking ammunition aboard or transferring it from one level to another. It is not designed for use as part of the normal path of ammunition from stowage point to the gun deck.

Ammunition hoist safety features. Noteworthy safety features of ammunition hoists include:

1. Automatic hoists have doors or gates which will permit them to start up only after the ammunition item has been completely inserted into the hoist and the loader's hands have been withdrawn.
2. Automatic hoists will not start automatically when loaded if the top level discharge point is occupied with ammunition.
3. All hoists in which powder bags are handled are equipped with flametight doors and interlocks to prevent an open flame path between lower handling room and gun deck.
4. Most power-operated ammunition hoists are equipped for manual operation in event of power failure.
5. Ammunition hoists are equipped with hydraulically actuated brakes or hydraulic locking to prevent loaded flights or cars from falling or drifting down the hoistway.
6. Most hoists are equipped with indicators to show whether there is an ammunition item at the receiving end of the hoist.

5B9. Miscellaneous safety features

Some of the safety features of modern gun mounts and turrets have been taken up in connection with the other mechanisms or systems discussed above. But there are several additional noteworthy ones that should be taken up briefly. These are discussed in detail and illustrated in later chapters of this text, where appropriate.

Salvo latch. This is a device that locks the breech closed. It can be opened only by deliberate effort. The function of the salvo latch is to prevent accidental manual opening of the breech in the event of misfire.

Salvo latches are part of the breech mechanism of all guns larger than 40-mm, except for the very newest designs of automatically loaded guns like the 8-inch case gun used in *Salem* class turrets. It is also omitted from guns smaller than 3″/50.

The salvo latch is a positive lock which is, in present designs, cammed to open automatically during recoil of the gun. It will not open automatically if the gun does not recoil.

Safety link. The safety link is a metal strip that couples the breech yoke (in bag guns) or housing (in case guns) to the slide. It is intended to hold the gun in battery in the event of failure of the counterrecoil mechanism, or if the counterrecoil mechanism is disabled. It is used in guns equipped with hydropneumatic counterrecoil systems.

If the gun is fired with the safety link engaged, the link will part. However, it is part of the normal gun operating procedure to disconnect and stow the link before firing. The link *must* be replaced when the mount is secured.

Gas ejection. When a shot is fired from a gun, the bore is filled with residual powder gas. The gas is unsafe for humans to breathe, and is likely to be either flammable or actually burning; it is sometimes capable of spontaneous combustion when mixed with air. The function of the gas ejector, which is a part of every enclosed mount 5-inch and larger, is to force this residual gas out of the bore by a blast of air from the ship's air system.

In case guns the gas ejector is designed to open and shut off automatically during normal operation, though it can be operated manually. In bag guns the gas ejector goes on automatically when the breech plug opens, but must be shut off manually by the gun captain.

When a gas ejector fails, the gun can continue firing, but caution is necessary to ensure safety. The rate of fire may have to be reduced. In bag guns, powder bags for the next round must not be exposed until fumes and embers have been cleared away. Inspection for smoldering embers is required in any event in bag guns, but it is especially important in case of gas ejector failure.

5B10. Sighting and fire-control equipment

With the increase in ranges of modern guns the problem of aiming the gun has become more complex. Sighting is considerably more complicated than merely pointing the gun at the target and firing. A projectile, when fired, travels in a curved path, not a straight line. This curved path is called the *trajectory.*

Many factors affect the trajectory of the projectile. The major factor is the force of gravity, which causes the projectile to start falling as soon as it leaves the support the barrel provides. To fire at long range, the bore axis of the gun must therefore be elevated. Another force affecting the trajectory is the wind, which tends to blow the projectile off its course. Then there is the problem of the moving target. While target motion does not affect the trajectory, the gunner must lead the target the proper amount to hit.

These factors and others complicate the problem of aiming a gun. The solution of this problem is in the field of *fire control.* The fire control system, in solving the gunnery problem, computes the angle by which the bore axis of the gun should be offset from the straight line between the gun and the target. This straight line is called the *line of sight* (LOS). It is the starting point in aiming the gun. With the line of sight on target, and the bore axis offset the correct amount, the gun is aimed for a hit.

The offset is divided into 2 components, 1 vertical, called *sight angle,* and 1 horizontal, called *sight deflection.* Sight angle and sight deflection are the angular values of the offsets which the fire control system computes and transmits to the gun for use in aiming (fig. 5B33).

The sights at the gun provide for establishing the line of sight and for introducing sight angle and sight deflection so that the gun's bore axis will be properly offset. In gun mounts 3-inch and larger, sights generally consist of telescopes which move in train and elevation with the gun and also can be moved vertically and horizontally with respect to the gun bore axis to introduce sight angle and sight deflection. For accuracy at long range, telescopes give an enlarged view of the target.

One telescope is provided for the gun pointer and another for the trainer. Each telescope has a reticle with a vertical and a horizontal crosshair to establish accurately the line of sight to the target. The pointer elevates or depresses the gun to get the horizontal crosshair on target, and the trainer trains the mount to get the vertical crosshair on target.

Offsetting the sight telescopes with respect to the bore axis is the duty of a third member of the mount crew, the *sight setter.* The computed value of sight angle and sight deflection to be used is sent by telephone or indicated on dials to the sight setter. He has two handcranks which he uses to move the telescopes, one to shift them vertically by the amount of sight angle, the other to move them horizontally by the amount of sight deflection. The sight-setting mechanism has scales which enable the sight setter to crank in the precise values.

On most mounts, there are two scales the sight setter can use to introduce sight angle (the vertical offset). One is graduated in minutes of arc, to display the actual value of the angle. The other is graduated in yards of range. This is called the *sight bar range* scale. It is designed for use against surface targets only. This range scale is used when the fire control system transmits the range to target (plus or minus corrections for wind, target motion, *etc.*), in linear units—yards. Most modern fire control systems transmit sight angle in minutes of arc. But some auxiliary systems still use linear values (yards on the sight bar range scale). Whichever scale is used, the sight setter turns the same handcrank to set the desired value.

To introduce the correct amount of horizontal offset, the sight setter sets the value of sight deflection on the sight deflection scale, graduated in *mils.* (A mil is the angle subtended by an arc of length equal to one-thousandth of the arc's radius—equivalent to 3.44 minutes.) This value is computed by the fire control system and sent to the gun. There it is set on the sight deflection scale by the sight setter with the deflection handcrank.

In aiming a gun, the pointer, trainer, and sight setter work as a three-man team. The pointer sights through his telescope and keeps the horizontal crosshair on the target. The trainer sights through his telescope, keeping the vertical crosshair on the target. This estab-

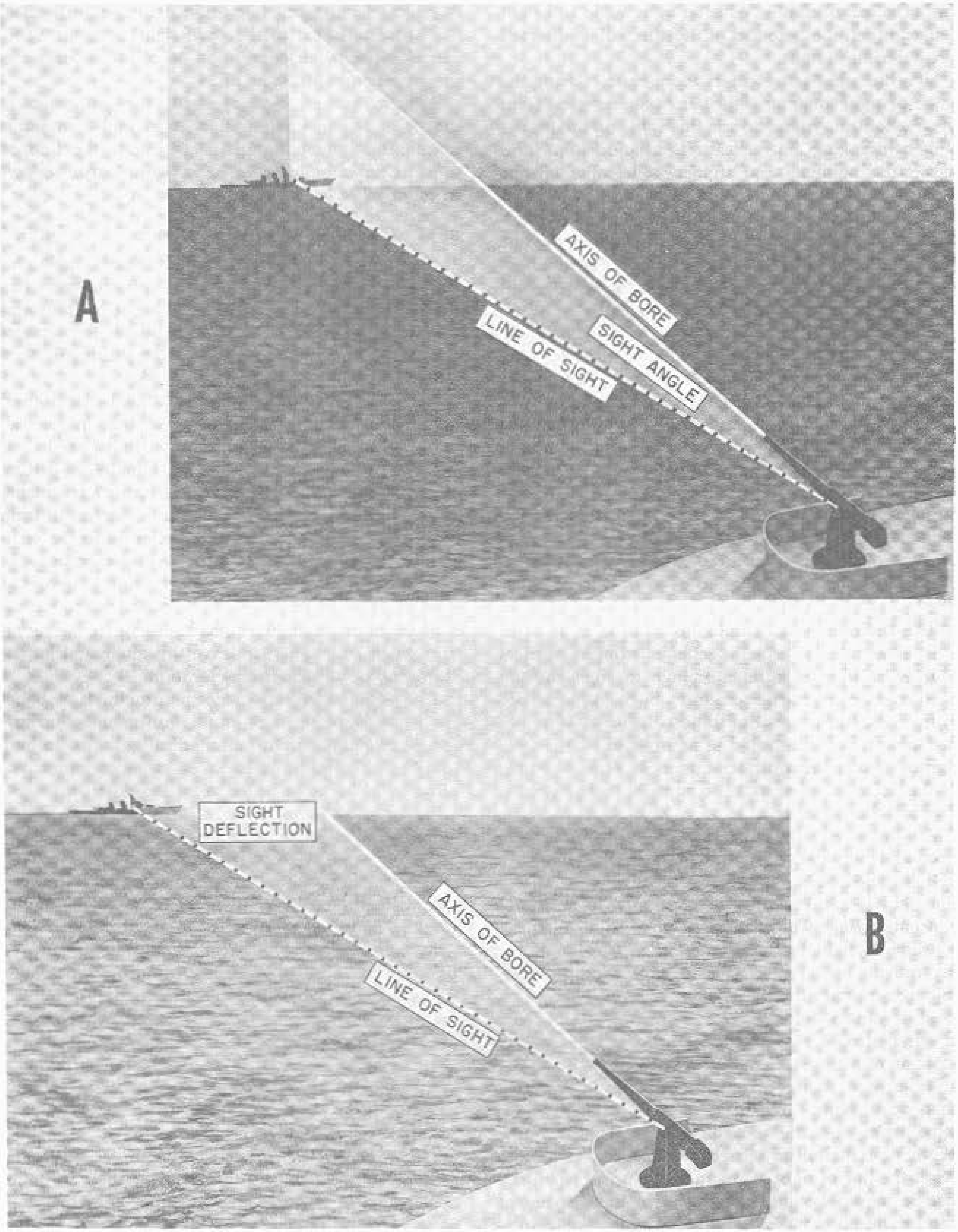

FIGURE 5B33.—Sight angle (A) and sight deflection (B).

lishes the line of sight. With no sight angle and sight deflection set, the bore axis of the gun will be directed along the line of sight.

Here the sight setter enters the picture. Using the value of sight angle or sight bar range received from the fire control system, he sets this value on the proper scale by cranking the vertical offset handcrank. This moves the pointer's and trainer's telescopes off the target—usually moving them downward.

The pointer then elevates with the elevation handwheel until he is back on target. In doing this, he elevates the gun as well as the telescope, and the bore axis of the gun is now elevated above the line of sight by the proper vertical offset (sight angle).

Likewise, when the sight setter cranks in the value of sight deflection, the trainer's and pointer's telescopes move off the target to the right or left. The trainer then puts his vertical crosshair back on the target by training with the train handwheels. This trains the entire mount, offsetting the bore axis from the line of sight by the amount of the sight deflection.

Thus the three-man team establishes the line of sight and also offsets the bore axis from the line of sight by the amounts of the sight angle and sight deflection, so that the projectile, when fired, will hit the target.

5B11. Types of sights

The simplest type of sight now in use is an open sight consisting of a small peephole behind a vertical rod. The line from the peephole through the top of the rod defines the line of sight. Such a sight is used at the local surface control station of the 3"/50 rapid-fire mount; it is illustrated in figure 9D9. This open sight is used to bring surface targets into the view field of the adjacent telescope; it is not primarily designed for controlling gunfire.

An almost equally simple type of open sight is the peep-and-ring sight; an example is visible in figure 9C1 installed on a 40-mm mount. The rear part of the sight is a peephole. The front part consists of concentric rings which are used not only to establish the line of sight but also to estimate lead angle for fast-moving air targets. Considerable skill and training are necessary for effective use of this sight. It is used nowadays only for local control in emergencies, or for slewing a gun mount toward the approximate location of a target.

Telescopic sights permit more accurate sighting than open sights. There are two general types—the fixed-prism and the movable-prism. In the fixed-prism type the entire telescope is moved in order to offset the line of sight. The movable-prism type need not be moved because the prisms in the instrument can be shifted to offset the line of sight. The principles of prismatic telescopes are taken up in volume 2. A typical fixed-prism telescopic sight is shown on a 3"/50 mount, next to the open sight, in figure 9D9. Movable-prism telescopes used on 5"/38 mounts are shown in figures 8B23 and 8B24.

A third general type of sight, the lead-computing sight, has movable optical parts and computing mechanisms which automatically offset the line of sight. Lead-computing sight mechanisms are discussed in volume 2.

5B12. Train and elevation systems

One important respect in which today's naval gun differs from its ancestors is in the improvement in (a) the methods available for positioning it in train and elevation, and (b) the methods available for measuring its position—or, alternately, for shifting it to a prescribed position.

Some smaller old-time cannon, called swivel guns, could be trained with relative ease, but, in general, training the old-time heavy cannon that poked their muzzles through the gun ports was a matter of getting the whole gun crew to drag it ponderously a few inches to one side or the other. Only a few degrees of train were possible anyway. It was better (and far commoner) to turn the whole ship. As for elevating, the old-time guns were breech-heavy, and a quoin or wedge under the breech could be pulled out to elevate the gun, or driven in to depress it. Again, it was easier, and much commoner, to leave this alone and let the ship's roll decide the firing elevation.

Long before aircraft made such methods as hopelessly antiquated as they sound, gun mounts and turrets were equipped with mechanical gear for training and elevating the gun barrel. But the development of aircraft in war accelerated these developments.

In a modern gun mount, the trunnions are placed where the gun is approximately in balance. In conventional designs, handwheels connected through gearing to the training and elevating gear are arranged so that the pointer's handwheels are at his station on the left, and the trainer's at his station on the right. The pointer's handwheels, in gun mounts, turn a pinion which rotates a gear sector on the slide called the elevating arc. (Figure 5B34.) The trainer's handwheel, through gearing, turns a gear that engages the training circle in the stand.

In bag-type turrets, where maximum elevation is limited and the mass of the parts to be elevated is especially great, the elevating gear turns an *elevating nut* which engages a screw pivoted to the gun slide. (Figure 5B34 inset.) Turrets of the case type must be capable of much greater elevations than are practical with this type of arrangement. They therefore use an arc-and-pinion type of elevating gear.

All turrets, and mounts larger than 20-mm, use

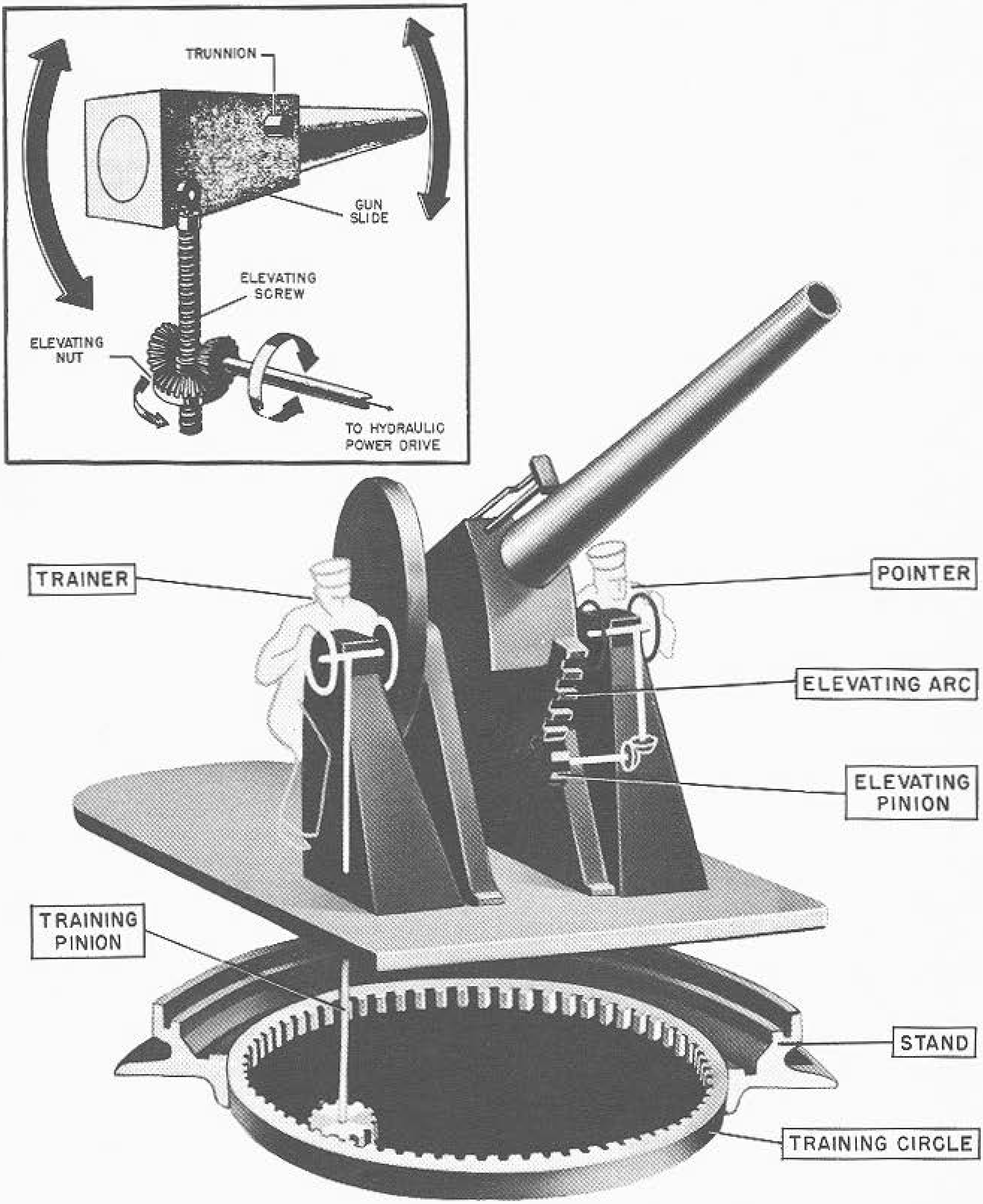

FIGURE 5B34.—Training and elevating gear. (Inset: Screw-type elevating gear.)

power drives as the normal method of positioning, though the pointer and trainer can readily switch to manual operation. Power drives and controls are discussed in more detail in chapter 10.

In some later mounts all these conventional arrangements are not followed. For example, in the automatically loaded 3"/50 mounts, the gun cannot be manually elevated and trained from the gun-laying stations on either side of the mount. The controls there provide only for operating the mount through the power drives. The left gun layer's station is used for positioning the mount when firing on air targets; the right gun layer's station is in control for surface targets. Either station, or the director, may be in full control. When either gunlaying station is in control, mount train and elevation are both controlled by that station. Hence there is no "pointer's" station or "trainer's" station on this mount. And manual elevation and train are used only for positioning the mount for maintenance or alignment-checking purposes.

C. Conclusion

5C1. General

The preceding section provided an overview of the 10 major features or characteristics which distinguish the modern gun from its predecessors. As the discussion has pointed out several times, not all of these features will be found in all modern guns—particularly in small arms and machine guns. And considerable variations in details of design from one mark and mod of weapon to another. But the features described are those that are referred to elsewhere in this book as "conventional," meaning that they represent standard practice in the art of gun and mount design as it exists in the United States Navy about the middle of the 20th century. New developments and improvements in guns and mounts are, of course, always in progress. Many of these are taken up later in this series of textbooks—particularly in chapter 32, volume 3. Further details of these "conventional" features, as they pertain to specific guns and mounts, are in later chapters concerned with the different main types used in the Fleet.

5C2. Review of definitions

Following is a brief list of definitions which summarize in general form some key terms used in the preceding section.

Gun. The term *gun* properly designates the tube or barrel, but is commonly used to refer to the whole assembly of which the barrel is but a part.

Mount. This is the entire system between the gun and the ship's structure which supports the gun, secures it to the ship's structure, and provides for its elevation, train, and (in guns larger than 20-mm) recoil and counterrecoil. There are several types of mounts, but all of them must accomplish these functions. Larger mounts have other functions as well.

Train. The train of a gun is the position of the axis of the gun's bore in azimuth (or in a plane parallel to the deck), as measured from the ship's centerline. *Training* the gun is rotating it in azimuth. The *trainer* is the person who controls the training of the gun. The *training gear* is the equipment used to train the gun.

Elevation. The elevation of a gun is the angle that the gun bore axis makes with the deck, measured perpendicular to the deck. *Elevating* the gun is increasing this angle; *depressing* the gun is decreasing this angle. The *elevating gear* is the equipment used to move the gun in elevation. The term *pointing* has the same meaning as the terms elevating and depressing combined. The *pointer* is the person who controls the elevation or pointing of the gun.

Recoil. Recoil is the force tending to push the gun to the rear as the projectile is discharged. It is the gun's reaction to firing. Recoil is also the rearward movement of the gun. The *recoil mechanism* is the equipment used to control the gun recoil. Recoiling parts are those that move with the gun in recoil and counterrecoil.

Counterrecoil. Counterrecoil is the forward movement of the gun after recoil which returns the gun to its original firing position. The *counterrecoil mechanism* (also known as the recuperator) is the equipment that returns the gun to its firing position.

In battery. A gun in its firing position as regards recoil and counterrecoil is said to be in battery. A gun moves out of battery during recoil and returns to battery during counterrecoil. *Recoil position* is the rearmost position of the recoiling parts in recoil movement.

Housing. The housing of a gun is a generally box-shaped structure joined to the gun barrel with a bayonet-type joint. On most intermediate-caliber guns it houses the breech mechanism. Since it is attached to the gun barrel, it is a recoiling part. Major-caliber bag guns have no housing; these have yokes, which, in general, perform a similar function. (See art. 7B1.)

Slide. On all guns larger than 20-mm, the slide is the structural part which supports the gun, housing, and other recoiling parts, and permits them to move in recoil. The slide will be discussed further in the next section, where it is taken up as part of the mount.